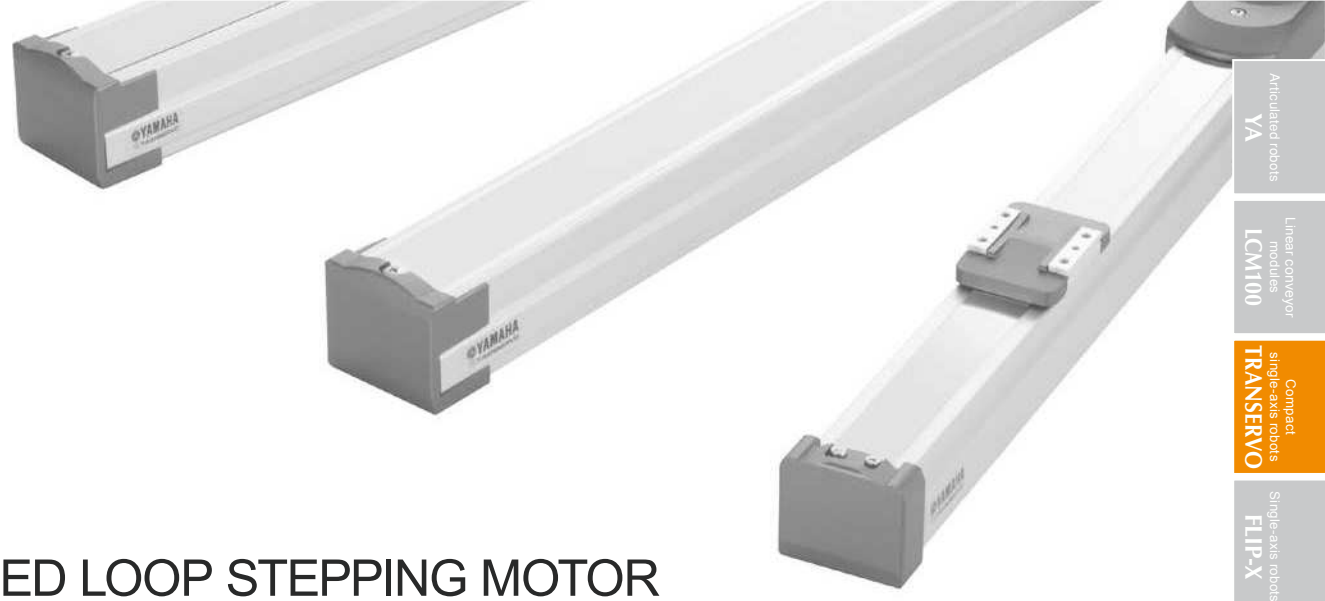

CLOSED LOOP STEPPING MOTOR SINGLE-AXIS ROBOTS

TRANSERVO SERIES

CONTENTS

■ **TRANSERVO SPECIFICATION SHEET** ····· **128**

■ **Robot ordering method description** ····· **129**

■ **Rod type: Bracket plates** ····· **129**

■ **Rod type: Grease gun nozzle tube for space-saving models** ····· **129**

■ **Rod type: Running life distance to life time conversion example** ····· **129**

TRANSERVO

SS04 ····· 130
SS05 ····· 132
SS05H ····· 134
SG07 ····· 136
SR03 ····· 137
SRD03 ····· 140
SR04 ····· 142
SRD04 ····· 144
SR05 ····· 146
SRD05 ····· 148
STH04 ····· 150
STH06 ····· 152
RF02-N ····· 154
RF02-S ····· 156
RF03-N ····· 158
RF03-S ····· 160
RF04-N ····· 162
RF04-S ····· 164
BD04 ····· 166
BD05 ····· 167
BD07 ····· 168

Main functions ▶ P.14

TRANSERVO SPECIFICATION SHEET

Type	Model	Size (mm) Note 1	Lead (mm)	Maximum payload (kg) Note 2 Horizontal	Maximum payload (kg) Note 2 Vertical	Maximum speed (mm/sec) Note 3	Stroke (mm)	Detailed info page
SS type (Slide type) Straight model/ Space-saving model	SS04-S SS04-R (L)	W49 × H59	12	2	1	600	50 to 400	P.130 - P.131
			6	4	2	300		
			2	6	4	100		
	SS05-S SS05-R (L)	W55 × H56	20	4	-	1000	50 to 800	P.132 - P.133
			12	6	1	600		
			6	10	2	300		
	SS05H-S SS05H-R (L)	W55 × H56	20	6	-	1000	50 to 800	P.134 - P.135
			12	8	2	600 (Horizontal) 500 (Vertical)		
			6	12	4	300 (Horizontal) 250 (Vertical)		
SG type (Slide type)	SG07	W65 × H64	20	36	4	1200	50 to 800	P.136
			12	43	12	800		
			6	46	20	350		
SR Type (Rod type) Straight model/ Space-saving model	SR03-S SR03-R (L) SR03-U	W48 × H56.5	12	10	4	500	50 to 200	P.137 - P.139
			6	20	8	250		
	SR04-S SR04-R (L)	W48 × H58	12	25	5	500	50 to 300	P.142 - P.143
			6	40	12	250		
			2	45	25	80		
	SR05-S SR05-R (L)	W56.4 × H71	12	50	10	300	50 to 300	P.146 - P.147
			6	55	20	150		
			2	60	30	50		
SR Type (Rod type with support guide) Straight model/ Space-saving model	SRD03-S SRD03-U	W105 × H56.5	12	10	3.5	500	50 to 200	P.140 - P.141
			6	20	7.5	250		
	SRD04-S SRD04-U	W135 × H58	12	25	4	500	50 to 300	P.144 - P.145
			6	40	11	250		
			2	45	24	80		
	SRD05-S SRD05-U	W157 × H71	12	50	8.5	300	50 to 300	P.148 - P.149
			6	55	18.5	150		
			2	60	28.5	50		
STH Type (Slide table type) Straight model/ Space-saving model	STH04-S	W45 × H46	5	6	2	200	50 to 100	P.150 - P.151
	STH04-R (L) Note 4	W73 × H51	10	4	1	400		
	STH06	W61 × H65	8	9	2	150	50 to 150	P.152 - P.153
	STH06-R (L)	W106 × H70	16	6	4	400		

Type	Model	High (mm)	Torque type	Rotational torque (N • m)	Maximum pushing torque (N • m)	Maximum speed (mm/sec) Note 3	Rotation range (°)	Detailed info page
RF Type (Rotary type) Standard model/ High rigidity model	RF02-N RF02-S	42 (Standard) 49 (High rigidity)	N:Standard	0.22	0.11	420	310 (RF02-N) 360 (RF02-S)	P.154 - P.157
			H:High torque	0.32	0.16	280		
	RF03-N RF03-S	53 (Standard) 62 (High rigidity)	N:Standard	0.8	0.4	420	320 (RF03-N) 360 (RF03-S)	P.158 - P.161
			H:High torque	1.2	0.6	280		
	RF04-N RF04-S	68 (Standard) 78 (High rigidity)	N:Standard	6.6	3.3	420	320 (RF04-N) 360 (RF04-S)	P.162 - P.165
			H:High torque	10	5	280		

Type	Model	Size (mm) Note 1	Lead (mm)	Maximum payload(kg) Note 2 Horizontal	Maximum payload(kg) Note 2 Vertical	Maximum speed (mm/sec) Note 3	Stroke (mm)	Detailed info page
BD Type (Belt type)	BD04	W40 × H40	48	1	-	1100	300 to 1000	P.166
	BD05	W58 × H48	48	5	-	1400	300 to 2000	P.167
	BD07	W70 × H60	48	14	-	1500	300 to 2000	P.168

Note 1. The size shows approximate maximum cross sectional size.
Note 2. The payload may vary depending on the operation speed. For details, refer to the detailed page of relevant model.
Note 3. The maximum speed may vary depending on the transfer weight or stroke length. For details, refer to the detailed page of relevant model.
Note 4. STH04-R (L) with 50-stroke and brake is not supported.

⚠ Precautions for use

■ **Handling**
Fully understand the contents stated in the "TRANSERVO User's Manual" and strictly observe the handling precautions during operation.

■ **Allowable installation ambient temperature**
[SS/SR type] 0 to 40 °C
[STH/RF/BD type] 5 to 40 °C

SR/SRD/STH type Speed vs. payload table

SR03

Horizontal

Lead 12 Payload (kg)	Lead 12 Speed (mm/sec)	Lead 12 %	Lead 6 Payload (kg)	Lead 6 Speed (mm/sec)	Lead 6 %
10	450	90	20	225	90
5	500	100	15	237.5	95
			10	250	100

Vertical

Lead 12 Payload (kg)	Lead 12 Speed (mm/sec)	Lead 12 %	Lead 6 Payload (kg)	Lead 6 Speed (mm/sec)	Lead 6 %
4	300	60	8	150	60
2	432	86	5	200	80
1	500	100	2	250	100

SRD03

Horizontal

Lead 12 Payload (kg)	Lead 12 Speed (mm/sec)	Lead 12 %	Lead 6 Payload (kg)	Lead 6 Speed (mm/sec)	Lead 6 %
10	450	90	20	225	90
5	500	100	15	237.5	95
			10	250	100

Vertical

Lead 12 Payload (kg)	Lead 12 Speed (mm/sec)	Lead 12 %	Lead 6 Payload (kg)	Lead 6 Speed (mm/sec)	Lead 6 %
3.5	300	60	7.5	150	60
1.5	432	86	4.5	200	80
0.5	500	100	1.5	250	100

SR04

Horizontal

Lead 12 Payload (kg)	Lead 12 Speed (mm/sec)	Lead 12 %	Lead 6 Payload (kg)	Lead 6 Speed (mm/sec)	Lead 6 %	Lead 2 Payload (kg)	Lead 2 Speed (mm/sec)	Lead 2 %
25	320	64	40	200	80	45	80	100
20	363	72	30	225	90			
15	407	81	20	250	100			
5	500	100						

Vertical

Lead 12 Payload (kg)	Lead 12 Speed (mm/sec)	Lead 12 %	Lead 6 Payload (kg)	Lead 6 Speed (mm/sec)	Lead 6 %	Lead 2 Payload (kg)	Lead 2 Speed (mm/sec)	Lead 2 %
5	200	40	12	125	50	25	60	75
2	350	70	5	200	80	5	80	100
1	500	100	2	250	100			

SRD04

Horizontal

Lead 12 Payload (kg)	Lead 12 Speed (mm/sec)	Lead 12 %	Lead 6 Payload (kg)	Lead 6 Speed (mm/sec)	Lead 6 %	Lead 2 Payload (kg)	Lead 2 Speed (mm/sec)	Lead 2 %
25	320	64	40	200	80	45	80	100
20	363	72	30	225	90			
15	407	81	20	250	100			
5	500	100						

Vertical

Lead 12 Payload (kg)	Lead 12 Speed (mm/sec)	Lead 12 %	Lead 6 Payload (kg)	Lead 6 Speed (mm/sec)	Lead 6 %	Lead 2 Payload (kg)	Lead 2 Speed (mm/sec)	Lead 2 %
4	200	40	11	120	48	24	60	75
3	250	50	4	200	80	14	70	87
0.5	500	100	1	250	100	4	80	100

SR05

Horizontal

Lead 12 Payload (kg)	Lead 12 Speed (mm/sec)	Lead 12 %	Lead 6 Payload (kg)	Lead 6 Speed (mm/sec)	Lead 6 %	Lead 2 Payload (kg)	Lead 2 Speed (mm/sec)	Lead 2 %
50	168	56	55	135	90	60	50	100
40	198	66	40	150	100			
30	249	83						
20	300	100						

Vertical

Lead 12 Payload (kg)	Lead 12 Speed (mm/sec)	Lead 12 %	Lead 6 Payload (kg)	Lead 6 Speed (mm/sec)	Lead 6 %	Lead 2 Payload (kg)	Lead 2 Speed (mm/sec)	Lead 2 %
10	69	23	20	48	32	30	30	60
5	168	56	15	75	50	5	50	100
1	300	100	2	150	100			

SRD05

Horizontal

Lead 12 Payload (kg)	Lead 12 Speed (mm/sec)	Lead 12 %	Lead 6 Payload (kg)	Lead 6 Speed (mm/sec)	Lead 6 %	Lead 2 Payload (kg)	Lead 2 Speed (mm/sec)	Lead 2 %
50	168	56	55	135	90	60	50	100
40	198	66	40	150	100			
30	249	83						
20	300	100						

Vertical

Lead 12 Payload (kg)	Lead 12 Speed (mm/sec)	Lead 12 %	Lead 6 Payload (kg)	Lead 6 Speed (mm/sec)	Lead 6 %	Lead 2 Payload (kg)	Lead 2 Speed (mm/sec)	Lead 2 %
8.5	90	30	18.5	48	32	28.5	30	60
5.5	138	46	8.5	102	68	5	50	100
0.5	300	100	0.5	150	100			

STH04

Horizontal

Lead 10 Payload (kg)	Lead 10 Speed (mm/sec)	Lead 10 %	Lead 5 Payload (kg)	Lead 5 Speed (mm/sec)	Lead 5 %
4	400	100	6	200	100
2	400	100	3	200	100
1	400	100	1	200	100

Vertical

Lead 10 Payload (kg)	Lead 10 Speed (mm/sec)	Lead 10 %	Lead 5 Payload (kg)	Lead 5 Speed (mm/sec)	Lead 5 %
1	220	62	2	150	75
0.75	220	62	1	150	75
0.3	350	100	0.5	200	100

STH06

Horizontal

Lead 16 Payload (kg)	Lead 16 Speed (mm/sec)	Lead 16 %	Lead 8 Payload (kg)	Lead 8 Speed (mm/sec)	Lead 8 %
6	400	100	9	150	100
3	400	100	5	150	100
1	400	100	1	150	100

Vertical

Lead 16 Payload (kg)	Lead 16 Speed (mm/sec)	Lead 16 %	Lead 8 Payload (kg)	Lead 8 Speed (mm/sec)	Lead 8 %
2	200	80	4	100	66
1.5	200	80	3	100	66
1	250	100	2	140	93
			1	150	100

Robot ordering method description

In the order format for the YAMAHA single-axis robots TRANSERVO series, the notation (letters/numbers) for the mechanical section is shown linked to the controller section notation.

[Example]

● Mechanical ▶ SS05

- Lead ▷ 6mm
- Model ▷ Straight
- Brake ▷ Yes
- Origin position ▷ Standard
- Grease ▷ Standard
- Stroke ▷ 600mm
- Cable length ▷ 1m

● Controller ▶ TS-S2

- Input /Output selection ▷ NPN

● Ordering Method

SS05-06SB-NN-600-1K - S2NP

Mechanical section — Controller section

To find detailed controller information see the controller page.
TS-S2 ▶ P.490, TS-SH ▶ P.490, TS-SD ▶ P.500

● SS type / SG type (Slider type)

Model	Lead	Model	Brake	Origin position	Grease option	Stroke	Cable length
SS04 SS05 SS05H SG07	02 2mm 06 6mm 12 12mm 20 20mm	S Straight model R Space-saving model (motor installed on right) L Space-saving model (motor installed on left)	N With no brake B With brake	N Standard Z No-motor side	N Standard grease C Clean room grease		1K 1m 3K 3m 5K 5m 10K 10m

● SR type (Rod type)

Model	Lead	Model	Brake	Origin position	Bracket plate	Stroke	Cable length
SR03 SRD03 SR04 SRD04 SR05 SRD05	02 2mm 06 6mm 12 12mm	S Straight model R Space-saving model (motor installed on right) L Space-saving model (motor installed on left) U Space-saving model (motor installed on top)	N With no brake B With brake	N Standard Z No-motor side	N No plate H With plate V With flange		1K 1m 3K 3m 5K 5m 10K 10m

● STH Type (Slide table type)

Model	Lead	Model	Brake	Origin position	Bracket plate	Stroke	Cable length
STH04 STH06	05 5mm 08 8mm 10 10mm 16 16mm	S Straight model R Space-saving model (motor installed on right) L Space-saving model (motor installed on left)	N With no brake B With brake	N Standard Z No-motor side	N No plate H With plate		1K 1m 3K 3m 5K 5m 10K 10m

● RF Type (Rotary type / Limit rotation specification, Rotary type / Sensor specification)

Model	Return-to-origin method	Bearing	Torque	Cable entry location	Rotation direction	Cable length
RF02-N RF02-S RF03-N RF03-S RF04-N RF04-S	N Stroke end (Limit rotation) S Sensor (Limitless rotation)	N Standard H High rigidity	N Standard torque H High torque	R From the right L From the left	N CCW Z CW	1K 1m 3K 3m 5K 5m 10K 10m

● BD Type (Belt type)

Model	Lead	Brake	Origin position	Stroke	Cable length
BD04 BD05 BD07	48 48mm	N With no brake	N Standard		1K 1m 3K 3m 5K 5m 10K 10m

Rod type: Bracket plates

SR03/SRD03 bracket plates

Feet (horizontal mount)

Flange (vertical mount)

Type	Model No.
Feet (2 plates per set)	KCU-M223F-00
Flange (1 piece)	KCU-M224F-00

SR04/SRD04 bracket plates

Feet (horizontal mount)

Flange (vertical mount)

Type	Model No.
Feet (2 plates per set)*	KCV-M223F-00
Flange (1 piece)	KCV-M224F-00

* Comes with 12 mounting nuts for feet.

SR05/SRD05 bracket plates

Feet (horizontal mount)

Flange (vertical mount)

Type	Model No.
Feet (2 plates per set)*	KCW-M223F-00
Flange (1 piece)	KCW-M224F-00

* Comes with 8 mounting nuts for feet.

Rod type: Grease gun nozzle tube for space-saving models

When greasing the ball screw in the SR03-UB or SRD03-UB (motor installed on top / with brake), use a grease gun with a bent nozzle tube as shown below.

■ Grease gun nozzle tube (YAMAHA recommended nozzle tube)

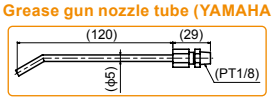

Model	KCU-M3861-00

Note. This nozzle tube can be attached to a commercially available ordinary grease gun.

This nozzle tube is even usable when there is little space around the grease port.
For example, when the SR04 or SR05 space-saving model is used with the motor facing up, the grease port is positioned on the side of the robot body. This may make it difficult to refill grease depending on the positions of other robots or peripheral units.

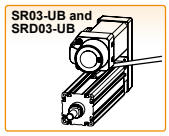

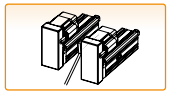

Rod type: Running life distance to life time conversion example

This is an example of life time converted from the running life distance listed on each model page for the SR type.

Model	SR04-02SB, Vertical mount, 25 kg payload
Life distance	500 km → Life time : Approx. 3 years
Operating conditions	100mm back-and-forth movement, shuttle time 16 seconds (duty: 20%)
Word conditions	16 hours per day
Work days	240 days per year

Note. Make sure that the rod is not subjected to a radical load.

SS04 Slider type

CE compliance
Origin on the non-motor side is selectable

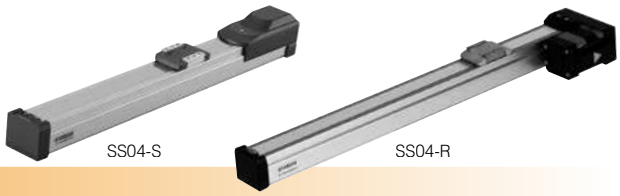

Ordering method

SS04 - [ ] - [ ] - [ ] - [ ] - [ ] - [ ] - [ ]

Model	Lead	Model	Brake	Origin position	Grease option	Stroke	Cable length Note 2
	12: 12mm 06: 6mm 02: 2mm	S: Straight model R: Space-saving model (motor installed on right) L: Space-saving model (motor installed on left)	N: With no brake B: With brake	N: Standard Note 1 Z: Non-motor side	N: Standard grease C: Clean room grease	50 to 400 (50mm pitch)	1K: 1m 3K: 3m 5K: 5m 10K: 10m

S2

Robot positioner	I/O
S2: TS-S2 Note 3	NP: NPN PN: PNP CC: CC-Link DN: DeviceNet™ EP: EtherNet/IP™ PT: PROFINET GW: No I/O board Note 4

SH

Robot positioner	I/O	Battery
SH: TS-SH	NP: NPN PN: PNP CC: CC-Link DN: DeviceNet™ EP: EtherNet/IP™ PT: PROFINET GW: No I/O board Note 4	B: With battery (Absolute) N: None (Incremental)

SD

Robot driver	I/O cable
SD: TS-SD	1: 1m

Note 1. If changing from the origin position at the time of purchase, the machine reference amount must be reset. For details, refer to the manual.
Note 2. The robot cable is flexible and resists bending.
Note 3. See P.498 for DIN rail mounting bracket.
Note 4. Select this selection when using the gateway function. For details, see P.60.

Basic specifications

Motor		42 □ Step motor		
Resolution (Pulse/rotation)		20480		
Repeatability Note 1 (mm)		+/-0.02		
Deceleration mechanism		Ball screw ϕ8 (Class C10)		
Maximum motor torque (N·m)		0.27		
Ball screw lead (mm)		12	6	2
Maximum speed (mm/sec)		600	300	100
Maximum payload (kg)	Horizontal	2	4	6
	Vertical	1	2	4
Max. pressing force (N)		45	90	150
Stroke (mm)		50 to 400 (50mm pitch)		
Overall length (mm)	Horizontal	Stroke+216		
	Vertical	Stroke+261		
Maximum outside dimension of body cross-section (mm)		W49 × H59		
Cable length (m)		Standard: 1 / Option: 3, 5, 10		

Note 1. Positioning repeatability in one direction.

Motor installation (Space-saving model)

R type Motor installed on right

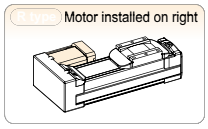

L type Motor installed on left

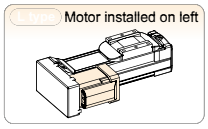

Allowable overhang Note

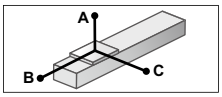

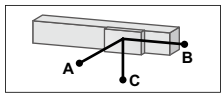

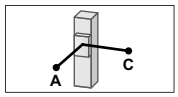

Horizontal installation (Unit: mm)

		A	B	C
Lead 12	1kg	807	218	292
	2kg	667	107	152
Lead 6	2kg	687	116	169
	3kg	556	76	112
	4kg	567	56	84
Lead 2	4kg	869	61	92
	6kg	863	40	60

Wall installation (Unit: mm)

		A	B	C
Lead 12	1kg	274	204	776
	2kg	133	93	611
Lead 6	2kg	149	102	656
	3kg	92	62	516
	4kg	63	43	507
Lead 2	4kg	72	48	829
	6kg	39	29	789

Vertical installation (Unit: mm)

		A	C
Lead 12	0.5kg	407	408
	1kg	204	204
Lead 6	1kg	223	223
	2kg	107	107
Lead 2	2kg	118	118
	4kg	53	53

Note. Distance from center of slider upper surface to carrier center-of-gravity at a guide service life of 10,000 km (Service life is calculated for 400mm stroke models).

Static loading moment

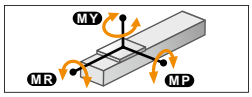

(Unit: N·m)

MY	MP	MR
16	19	17

Controller

Controller	Operation method
TS-S2 TS-SH	I/O point trace / Remote command
TS-SD	Pulse train control

SS04 Straight model S

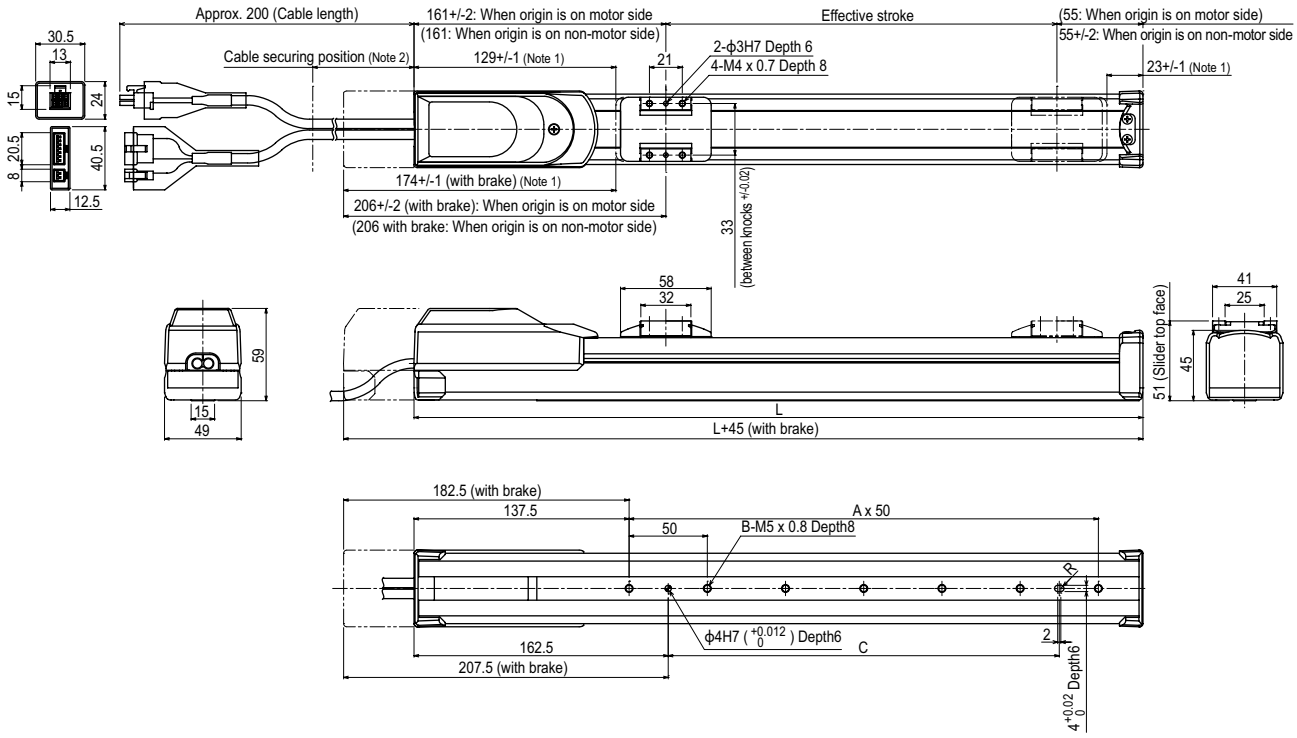

Effective stroke	50	100	150	200	250	300	350	400
L	266	316	366	416	466	516	566	616
A	2	3	4	5	6	7	8	9
B	3	4	5	6	7	8	9	10
C	50	100	150	200	250	300	350	400
Weight (kg) Note 4	1.5	1.6	1.7	1.8	2.0	2.1	2.2	2.3

Note 1. Stop positions are determined by the mechanical stoppers at both ends.
Note 2. Secure the cable with a tie-band 100mm or less from unit's end face to prevent the cable from being subjected to excessive loads.
Note 3. The cable's minimum bend radius is R30.
Note 4. These are the weights without a brake. The weights are 0.2kg heavier when equipped with a brake.

Controller	TS-S2 ▶ 490	TS-SH ▶ 490	TS-SD ▶ 500

SS04 Space-saving model R L

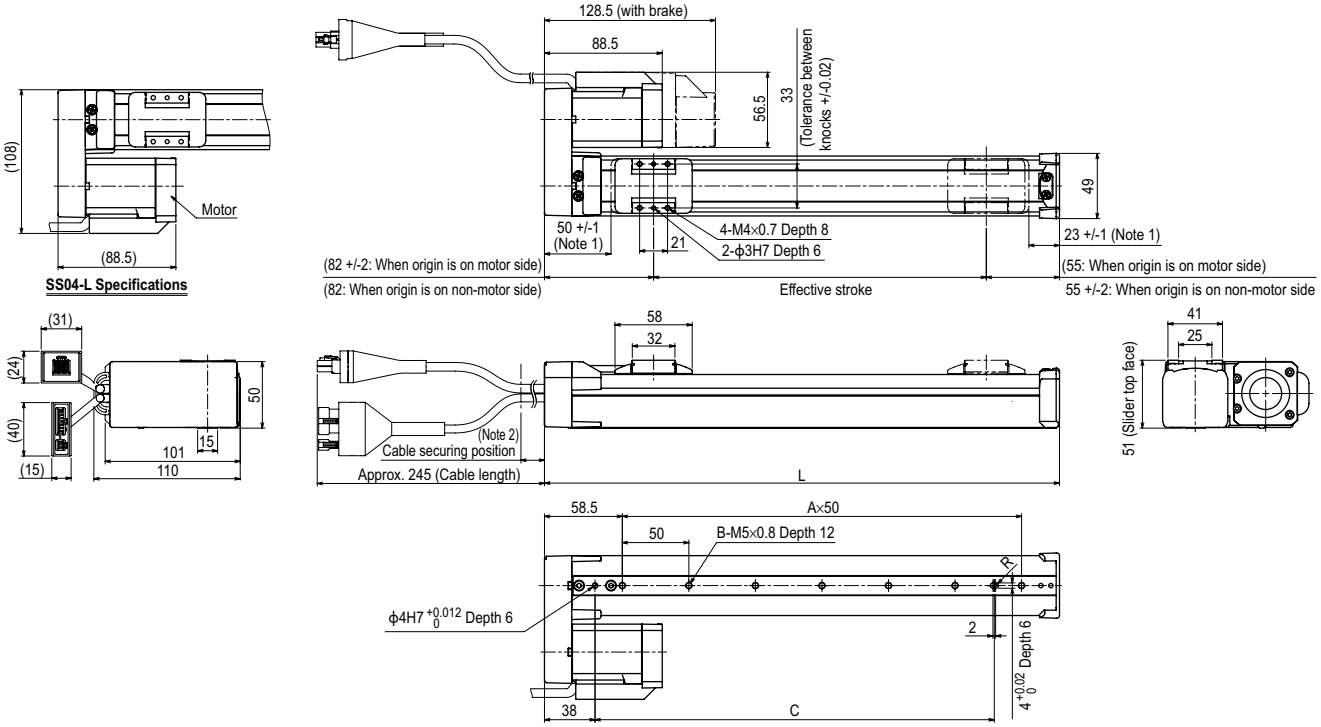

Effective stroke	50	100	150	200	250	300	350	400
L	187	237	287	337	387	437	487	537
A	2	3	4	5	6	7	8	9
B	3	4	5	6	7	8	9	10
C	100	150	200	250	300	350	400	450
Weight (kg) Note 4	1.2	1.4	1.5	1.6	1.7	1.8	1.9	2.1

Note 1. Stop positions are determined by the mechanical stoppers at both ends.
Note 2. Secure the cable with a tie-band 80mm or less from unit's end face to prevent the cable from being subjected to excessive loads.
Note 3. The cable's minimum bend radius is R30.
Note 4. These are the weights without a brake. The weights are 0.2kg heavier when equipped with a brake.
Note 5. The belt cover's left and right sides are asymmetrical. Therefore, if the motor mounting orientation is changed, the cover cannot be attached.

SS05 Slider type

- High lead: Lead 20
- CE compliance
- Origin on the non-motor side is selectable

Ordering method

SS05 – [ ] – [ ] – [ ] – [ ] – [ ] – [ ] – [ ] – [ ] – [ ] – [ ]

Model	Lead	Model	Brake Note 1	Origin position	Grease option	Stroke	Cable length Note 3
	20: 20mm 12: 12mm 06: 6mm	S: Straight model R: Space-saving model (motor installed on right) L: Space-saving model (motor installed on left)	N: With no brake B: With brake	N: Standard Note 2 Z: Non-motor side	N: Standard grease C: Clean room grease	50 to 800 (50mm pitch)	1K: 1m 3K: 3m 5K: 5m 10K: 10m

S2

Robot positioner	I/O
S2: TS-S2 Note 4	NP: NPN PN: PNP CC: CC-Link DN: DeviceNet™ EP: EtherNet/IP™ PT: PROFINET GW: No I/O board Note 5

SH

Robot positioner	I/O	Battery
SH: TS-SH	NP: NPN PN: PNP CC: CC-Link DN: DeviceNet™ EP: EtherNet/IP™ PT: PROFINET GW: No I/O board Note 5	B: With battery (Absolute) N: None (Incremental)

SD

Robot driver	I/O cable
SD: TS-SD	1: 1m

Note 1. Brake-equipped models can be selected only when the lead is 12mm or 6mm.
Note 2. If changing from the origin position at the time of purchase, the machine reference amount must be reset. For details, refer to the manual.
Note 3. The robot cable is flexible and resists bending.
Note 4. See P.498 for DIN rail mounting bracket.
Note 5. Select this selection when using the gateway function. For details, see P.60.

Basic specifications

Motor		42 □ Step motor		
Resolution (Pulse/rotation)		20480		
Repeatability Note 1 (mm)		+/-0.02		
Deceleration mechanism		Ball screw ϕ12 (Class C10)		
Maximum motor torque (N·m)		0.27		
Ball screw lead (mm)		20	12	6
Maximum speed Note 2 (mm/sec)		1000	600	300
Maximum payload (kg)	Horizontal	4	6	10
	Vertical	–	1	2
Max. pressing force (N)		27	45	90
Stroke (mm)		50 to 800 (50mm pitch)		
Overall length (mm)	Horizontal	Stroke+230		
	Vertical	Stroke+270		
Maximum outside dimension of body cross-section (mm)		W55 × H56		
Cable length (m)		Standard: 1 / Option: 3, 5, 10		

Note 1. Positioning repeatability in one direction.
Note 2. When the stroke is longer than 600mm, resonance of the ball screw may occur depending on the operation conditions (critical speed). In this case, reduce the speed setting on the program by referring to the maximum speeds shown in the table below.

Motor installation (Space-saving model)

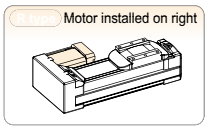

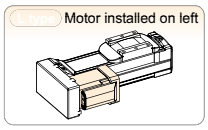

Allowable overhang Note

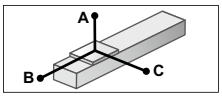

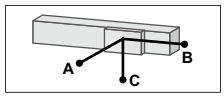

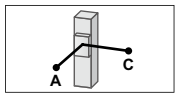

Horizontal installation (Unit: mm)

		A	B	C
Lead 20	2kg	413	139	218
	4kg	334	67	120
Lead 12	4kg	347	72	139
	6kg	335	47	95
Lead 6	4kg	503	78	165
	8kg	332	37	79
	10kg	344	29	62

Wall installation (Unit: mm)

		A	B	C
Lead 20	2kg	192	123	372
	4kg	92	51	265
Lead 12	4kg	109	57	300
	6kg	63	31	263
Lead 6	4kg	134	63	496
	6kg	76	35	377
	8kg	47	22	355

Vertical installation (Unit: mm)

		A	C
Lead 12	0.5kg	578	579
	1kg	286	286
Lead 6	1kg	312	312
	2kg	148	148

Note. Distance from center of slider upper surface to carrier center-of-gravity at a guide service life of 10,000 km (Service life is calculated for 600mm stroke models).

Static loading moment

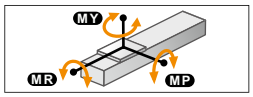

(Unit: N·m)

MY	MP	MR
25	33	30

Controller

Controller	Operation method
TS-S2 TS-SH	I/O point trace / Remote command
TS-SD	Pulse train control

SS05 Straight model S

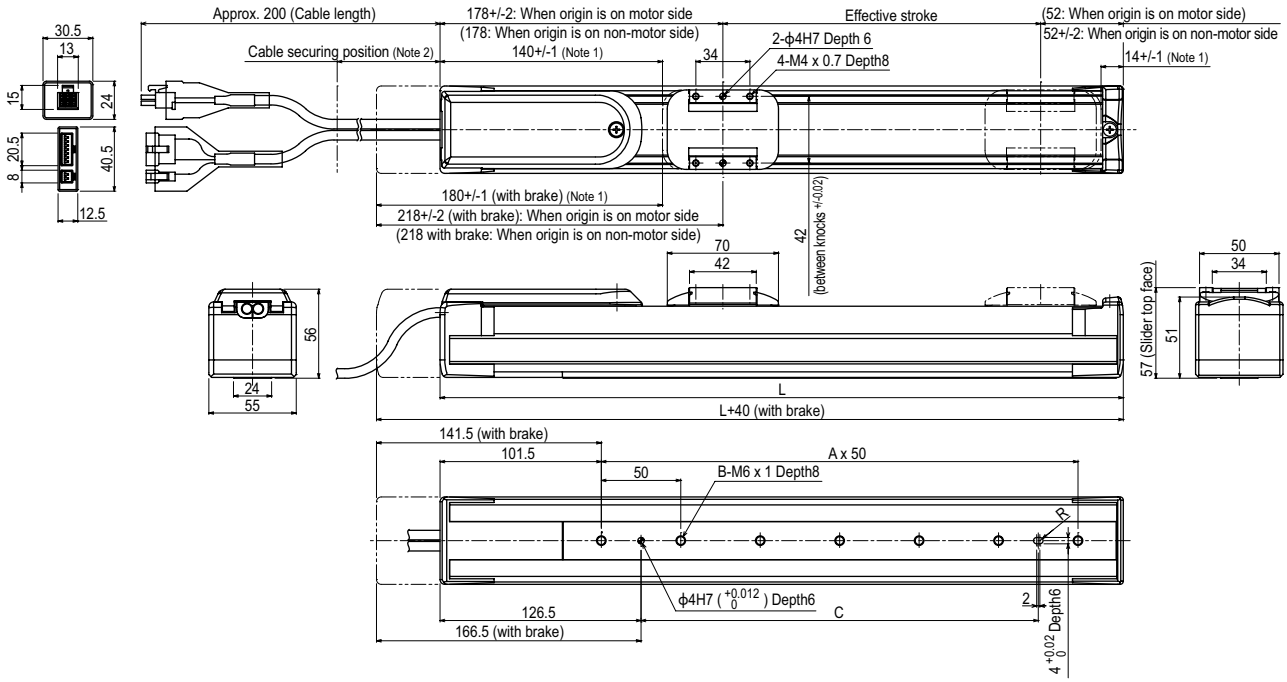

Effective stroke		50	100	150	200	250	300	350	400	450	500	550	600	650	700	750	800
L		280	330	380	430	480	530	580	630	680	730	780	830	880	930	980	1030
A		3	4	5	6	7	8	9	10	11	12	13	14	15	16	17	18
B		4	5	6	7	8	9	10	11	12	13	14	15	16	17	18	19
C		100	150	200	250	300	350	400	450	500	500	500	500	500	500	500	500
Weight (kg) Note 4		2.1	2.3	2.5	2.7	2.8	3.0	3.2	3.4	3.6	3.8	4.0	4.2	4.4	4.6	4.8	5.0
Maximum speed for each stroke Note 5 (mm/sec)	Lead20	1000												933	833	733	633
	Lead12	600												560	500	440	380
	Lead6	300												280	250	220	190
	Speed setting	–												93%	83%	73%	63%

Note 1. Stop positions are determined by the mechanical stoppers at both ends.
Note 2. Secure the cable with a tie-band 100mm or less from unit's end face to prevent the cable from being subjected to excessive loads.
Note 3. The cable's minimum bend radius is R30.
Note 4. These are the weights without a brake. The weights are 0.2kg heavier when equipped with a brake.
Note 5. When the stroke is longer than 600mm, resonance of the ball screw may occur depending on the operation conditions (critical speed). In this case, reduce the speed setting on the program by referring to the maximum speeds shown in the table at the left.

Controller	TS-S2 ▶ 490	TS-SH ▶ 490	TS-SD ▶ 500

SS05 Space-saving model R L

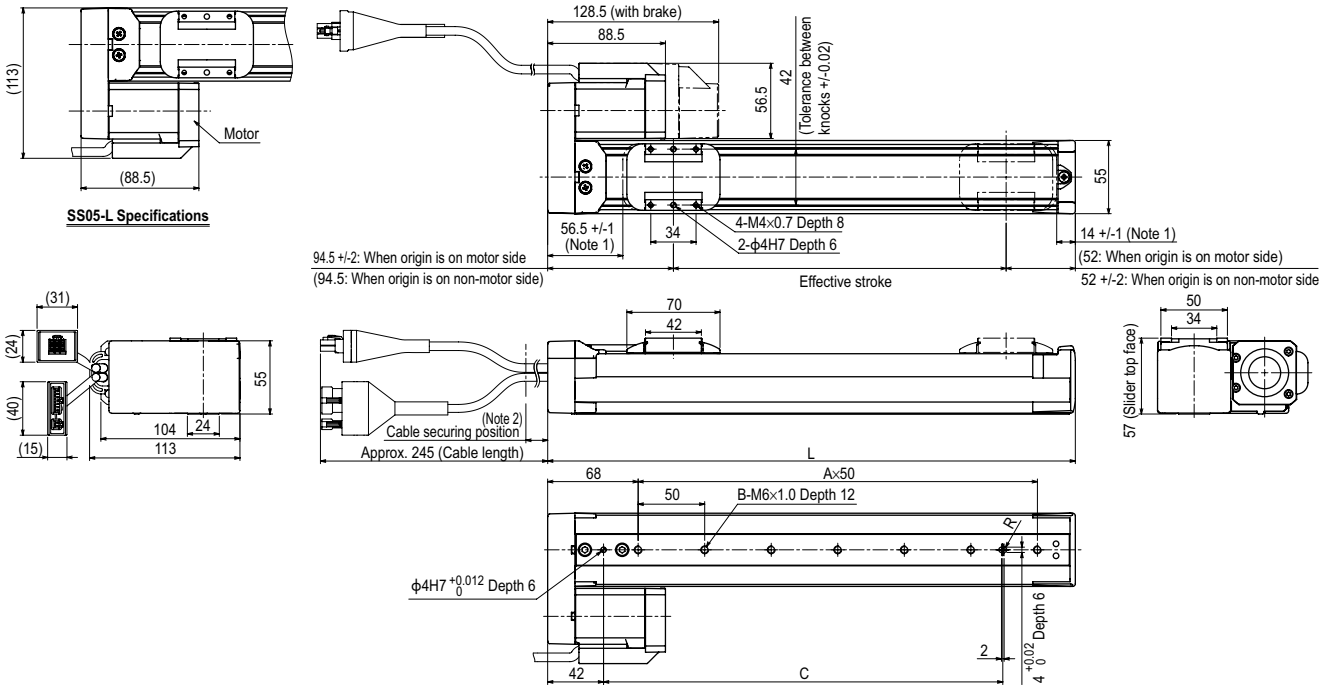

Effective stroke		50	100	150	200	250	300	350	400	450	500	550	600	650	700	750	800
L		196.5	246.5	296.5	346.5	396.5	446.5	496.5	546.5	596.5	646.5	696.5	746.5	796.5	846.5	896.5	946.5
A		2	3	4	5	6	7	8	9	10	11	12	13	14	15	16	17
B		3	4	5	6	7	8	9	10	11	12	13	14	15	16	17	18
C		100	150	200	250	300	350	400	450	500	500	500	500	500	500	500	500
Weight (kg) Note 4		1.6	1.8	2.0	2.2	2.4	2.6	2.8	3.0	3.2	3.4	3.6	3.8	4.0	4.1	4.3	4.5
Maximum speed for each stroke Note 5 (mm/sec)	Lead20	1000												933	833	733	633
	Lead12	600												560	500	440	380
	Lead6	300												280	250	220	190
	Speed setting	–												93%	83%	73%	63%

Note 1. Stop positions are determined by the mechanical stoppers at both ends.
Note 2. Secure the cable with a tie-band 80mm or less from unit's end face to prevent the cable from being subjected to excessive loads.
Note 3. The cable's minimum bend radius is R30.
Note 4. These are the weights without a brake. The weights are 0.2kg heavier when equipped with a brake.
Note 5. When the stroke is longer than 600mm, resonance of the ball screw may occur depending on the operation conditions (critical speed). In this case, reduce the speed setting on the program by referring to the maximum speeds shown in the table at the left.
Note 6. The belt cover's left and right sides are asymmetrical. Therefore, if the motor mounting orientation is changed, the cover cannot be attached.

SS05H Slider type

- High lead: Lead 20
- CE compliance
- Origin on the non-motor side is selectable

Ordering method

SS05H - [ ] - [ ] - [ ] - [ ] - [ ] - [ ] - [ ] - [ ] - [ ] - [ ]

Model	Lead	Model	Brake Note 1	Origin position	Grease option	Stroke	Cable length Note 3
	20: 20mm 12: 12mm 06: 6mm	S: Straight model R: Space-saving model (motor installed on right) L: Space-saving model (motor installed on left)	N: With no brake B: With brake	N: Standard Note 2 Z: Non-motor side	N: Standard grease C: Clean room grease	50 to 800 (50mm pitch)	1K: 1m 3K: 3m 5K: 5m 10K: 10m

S2

Robot positioner	I/O
S2: TS-S2 Note 4	NP: NPN PN: PNP CC: CC-Link DN: DeviceNet™ EP: EtherNet/IP™ PT: PROFINET GW: No I/O board Note 5

SH

Robot positioner	I/O	Battery
SH: TS-SH	NP: NPN PN: PNP CC: CC-Link DN: DeviceNet™ EP: EtherNet/IP™ PT: PROFINET GW: No I/O board Note 5	B: With battery (Absolute) N: None (Incremental)

SD **1**

Robot driver	I/O cable
SD: TS-SD	1: 1m

Note 1. Brake-equipped models can be selected only when the lead is 12mm or 6mm.
Note 2. If changing from the origin position at the time of purchase, the machine reference amount must be reset. For details, refer to the manual.
Note 3. The robot cable is flexible and resists bending.
Note 4. See P.498 for DIN rail mounting bracket.
Note 5. Select this selection when using the gateway function. For details, see P.60.

Basic specifications

Motor		42 □ Step motor		
Resolution (Pulse/rotation)		20480		
Repeatability Note 1 (mm)		+/-0.02		
Deceleration mechanism		Ball screw ϕ12 (Class C10)		
Maximum motor torque (N·m)		0.47		
Ball screw lead (mm)		20	12	6
Maximum speed Note 2 (mm/sec)	Horizontal	1000	600	300
	Vertical	–	500	250
Maximum payload (kg)	Horizontal	6	8	12
	Vertical	–	2	4
Max. pressing force (N)		36	60	120
Stroke (mm)		50 to 800 (50pitch)		
Overall length (mm)	Horizontal	Stroke+286		
	Vertical	Stroke+306		
Maximum outside dimension of body cross-section (mm)		W55 × H56		
Cable length (m)		Standard: 1 / Option: 3, 5, 10		

Note 1. Positioning repeatability in one direction.
Note 2. When the stroke is longer than 600mm, resonance of the ball screw may occur depending on the operation conditions (critical speed). In this case, reduce the speed setting on the program by referring to the maximum speeds shown in the table below.

Motor installation (Space-saving model)

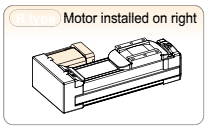

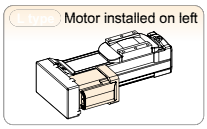

Allowable overhang Note

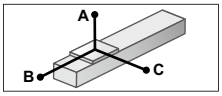

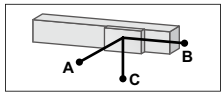

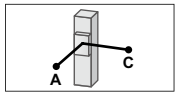

Horizontal installation (Unit: mm)

		A	B	C
Lead 20	2kg	599	225	291
	4kg	366	109	148
	6kg	352	71	104
Lead 12	4kg	500	118	179
	6kg	399	79	118
	8kg	403	56	88
Lead 6	6kg	573	83	136
	8kg	480	61	100
	10kg	442	47	78
	12kg	465	39	64

Wall installation (Unit: mm)

		A	B	C
Lead 20	2kg	262	203	554
	4kg	118	88	309
	6kg	71	49	262
Lead 12	4kg	146	96	449
	6kg	85	55	334
	8kg	55	34	305
Lead 6	6kg	101	62	519
	8kg	64	39	413
	10kg	43	26	355
	12kg	28	17	338

Vertical installation (Unit: mm)

		A	C
Lead 12	1kg	458	459
	2kg	224	224
Lead 6	2kg	244	245
	4kg	113	113

Note. Distance from center of slider upper surface to carrier center-of-gravity at a guide service life of 10,000 km (Service life is calculated for 600mm stroke models).

Static loading moment

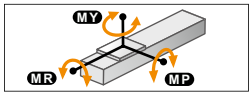

(Unit: N·m)

MY	MP	MR
32	38	34

Controller

Controller	Operation method
TS-S2 TS-SH	I/O point trace / Remote command
TS-SD	Pulse train control

SS05H Straight model S

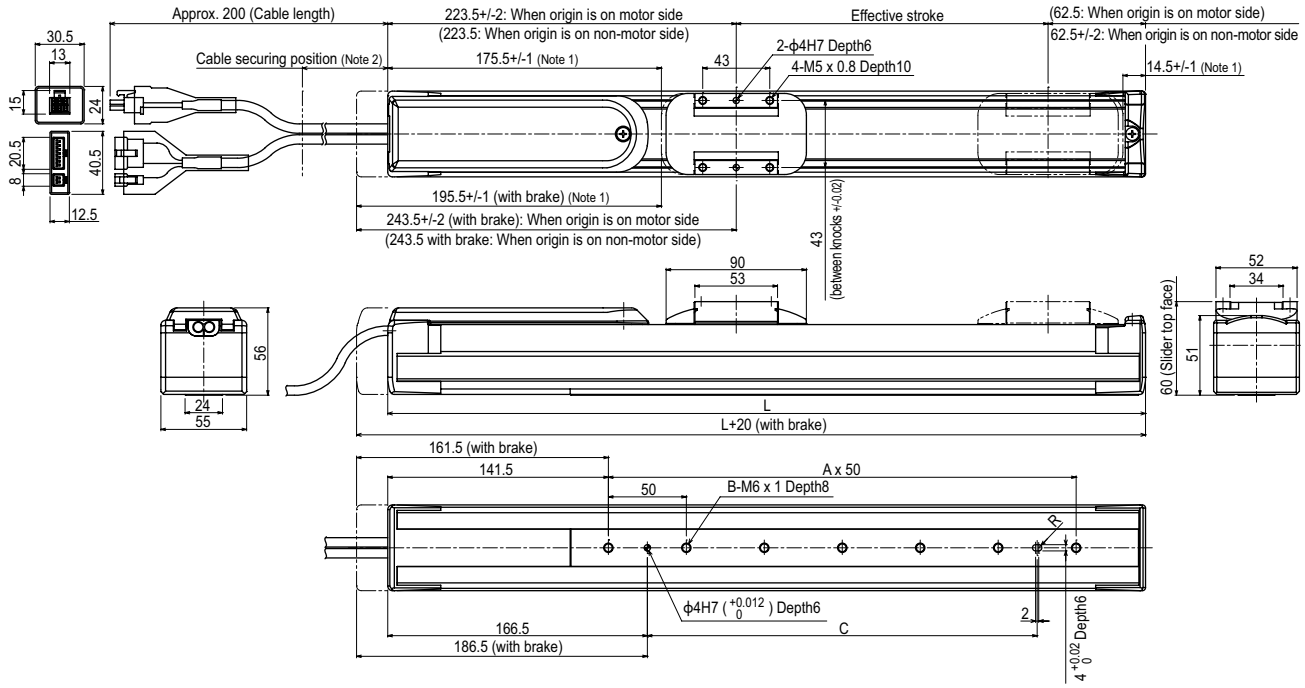

Effective stroke		50	100	150	200	250	300	350	400	450	500	550	600	650	700	750	800
L		336	386	436	486	536	586	636	686	736	786	836	886	936	986	1036	1086
A		3	4	5	6	7	8	9	10	11	12	13	14	15	16	17	18
B		4	5	6	7	8	9	10	11	12	13	14	15	16	17	18	19
C		100	150	200	250	300	350	400	450	500	500	500	500	500	500	500	500
Weight (kg) Note 4		2.4	2.6	2.8	3.0	3.2	3.4	3.6	3.8	4.0	4.2	4.4	4.5	4.7	4.9	5.1	5.3
Maximum speed for each stroke Note 5 (mm/sec)	Lead20	1000												933	833	733	633
	Lead12 (Horizontal)	600												560	500	440	380
	Lead12(Vertical)	500														440	380
	Lead6 (Horizontal)	300												280	250	220	190
	Lead6 (Vertical)	250														220	190
	Speed setting	–												93%	83%	73%	63%

Note 1. Stop positions are determined by the mechanical stoppers at both ends.
Note 2. Secure the cable with a tie-band 100mm or less from unit's end face to prevent the cable from being subjected to excessive loads.
Note 3. The cable's minimum bend radius is R30.
Note 4. These are the weights without a brake. The weights are 0.2kg heavier when equipped with a brake.
Note 5. When the stroke is longer than 600mm, resonance of the ball screw may occur depending on the operation conditions (critical speed). In this case, reduce the speed setting on the program by referring to the maximum speeds shown in the table at the left.

Controller	TS-S2 ▶ 490	TS-SH ▶ 490	TS-SD ▶ 500

SS05H Space-saving model R L

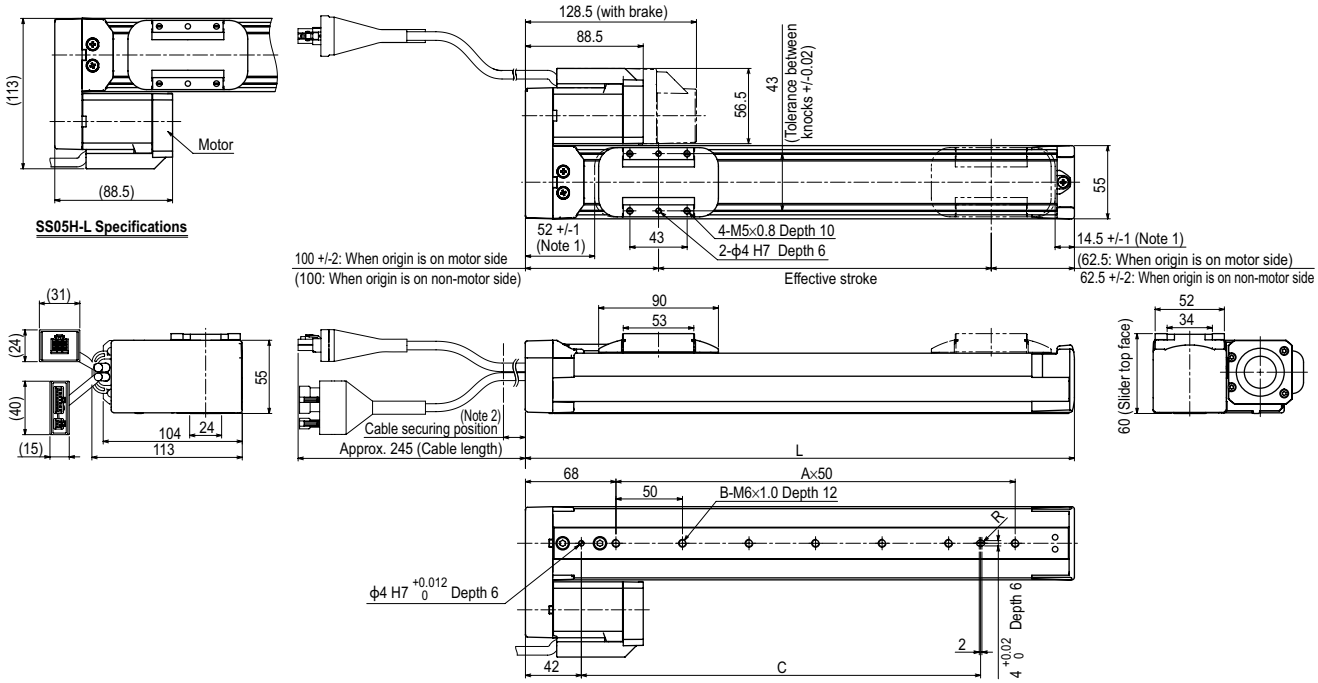

Effective stroke		50	100	150	200	250	300	350	400	450	500	550	600	650	700	750	800
L		212.5	262.5	312.5	362.5	412.5	462.5	512.5	562.5	612.5	662.5	712.5	762.5	812.5	862.5	912.5	962.5
A		2	3	4	5	6	7	8	9	10	11	12	13	14	15	16	17
B		3	4	5	6	7	8	9	10	11	12	13	14	15	16	17	18
C		100	150	200	250	300	350	400	450	500	500	500	500	500	500	500	500
Weight (kg) Note 4		1.7	1.9	2.1	2.3	2.5	2.7	2.8	3.0	3.2	3.4	3.6	3.8	4.0	4.2	4.4	4.6
Maximum speed for each stroke Note 5 (mm/sec)	Lead20	1000												933	833	733	633
	Lead12 (Horizontal)	600												560	500	440	380
	Lead12 (Vertical)	500														440	380
	Lead6 (Horizontal)	300												280	250	220	190
	Lead6 (Vertical)	250														220	190
	Speed setting	–												93%	83%	73%	63%

Note 1. Stop positions are determined by the mechanical stoppers at both ends.
Note 2. Secure the cable with a tie-band 80mm or less from unit's end face to prevent the cable from being subjected to excessive loads.
Note 3. The cable's minimum bend radius is R30.
Note 4. These are the weights without a brake. The weights are 0.2kg heavier when equipped with a brake.
Note 5. When the stroke is longer than 600mm, resonance of the ball screw may occur depending on the operation conditions (critical speed). In this case, reduce the speed setting on the program by referring to the maximum speeds shown in the table at the left.
Note 6. The belt cover's left and right sides are asymmetrical. Therefore, if the motor mounting orientation is changed, the cover cannot be attached.

SG07 Slider type

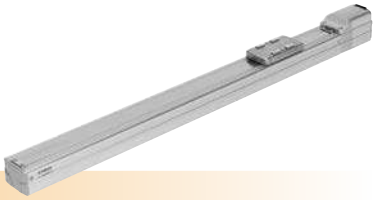

- High lead: Lead 20
- CE compliance
- Origin on the non-motor side is selectable.

Ordering method

SG07	Lead	Model	Brake	Origin position	Grease option	Stroke	Cable length Note 2	Robot positioner	I/O	Battery
	20: 20mm 12: 12mm 06: 6mm	S: Straight model	N: With no brake B: With brake	N: Standard Note 1 Z: Non-motor side	N: Standard grease C: Clean room grease	50 to 800 (50mm pitch)	1K: 1m 3K: 3m 5K: 5m 10K: 10m	SH: TS-SH	NP: NPN PN: PNP CC: CC-Link DN: DeviceNet™ EP: EtherNet/IP™ PT: PROFINET GW: No I/O board Note 3	B: With battery (Absolute) N: None (Incremental)

Note 1. If changing from the origin position at the time of purchase, the machine reference amount must be reset. For details, refer to the manual.
Note 2. The robot cable is flexible and resists bending.
Note 3. Select this selection when using the gateway function. For details, see P.60.

Basic specifications

Motor		56 □ Step motor		
Resolution (Pulse/rotation)		20480		
Repeatability Note 1 (mm)		+/-0.02		
Deceleration mechanism		Ball screw ϕ12 (Class C10)		
Ball screw lead (mm)		20	12	6
Maximum speed Note 2 Note 3 (mm/sec)		1200	800	350
Maximum payload (kg)	Horizontal	36	43	46
	Vertical	4	12	20
Max. pressing force (N)		60	100	225
Stroke (mm)		50 to 800 (50pitch)		
Overall length (mm)	Horizontal	Stroke+288		
	Vertical	Stroke+328		
Maximum outside dimension of body cross-section (mm)		W65×H64		
Cable length (m)		Standard: 1 / Option: 3, 5, 10		

Note 1. Positioning repeatability in one direction.
Note 2. When the stroke is longer than 600mm, resonance of the ball screw may occur depending on the operation conditions (critical speed). In this case, reduce the speed setting on the program by referring to the maximum speeds shown in the table below.
Note 3. It is necessary to change the maximum speed according to the payload. For details, see the "Speed vs. payload" graph shown below.
Note. Position detectors (resolvers) are common to incremental and absolute specifications.
If the controller has a backup function then it will be absolute specifications.

Allowable overhang Note

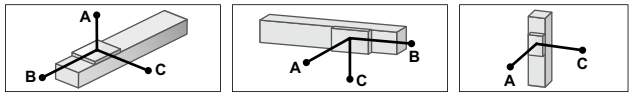

Horizontal installation (Unit: mm)

		A	B	C
Lead 20	10kg	3572	458	486
	25kg	2971	220	245
	36kg	3150	140	160
Lead 12	15kg	3703	363	406
	30kg	1962	172	196
	43kg	1430	114	131
Lead 6	15kg	3853	363	414
	30kg	2105	172	197
	46kg	1500	106	122

Wall installation (Unit: mm)

		A	B	C
Lead 20	10kg	450	402	3261
	25kg	117	155	2943
	36kg	98	85	2520
Lead 12	15kg	351	307	3403
	30kg	134	117	1663
	43kg	68	59	1070
Lead 6	15kg	353	307	3541
	30kg	134	117	1752
	46kg	58	50	1100

Vertical installation (Unit: mm)

		A	C
Lead 20	2kg	2303	2303
	4kg	1147	1147
Lead 12	4kg	1386	1386
	12kg	442	442
Lead 6	7kg	781	781
	20kg	252	252

Note. Distance from center of slider upper surface to carrier center-of-gravity at a guide service life of 10,000 km (Service life is calculated for 600mm stroke models).
Note. Calculated by the speed corresponding to the payload.

Static loading moment

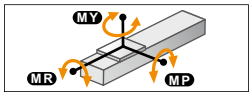

(Unit: N·m)

MY	MP	MR
101	114	101

Controller

Controller	Operation method
TS-SH	I/O point trace / Remote command

Speed vs. payload

Horizontal

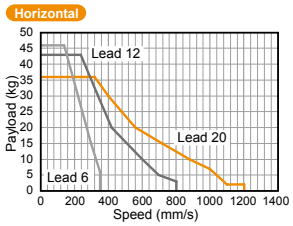

Quick reference

Lead 20 Payload (kg)	Speed (mm/sec)	%	Lead 12 Payload (kg)	Speed (mm/sec)	%	Lead 6 Payload (kg)	Speed (mm/sec)	%
36	320	26	43	240	30	46	140	40
30	400	33	40	255	31	42	155	44
25	480	40	35	295	36	40	165	47
20	560	46	30	340	42	35	190	54
15	720	60	25	380	47	30	200	57
10	800	66	20	420	52	25	245	70
9	900	75	15	500	62	20	270	77
8	950	79	10	600	75	15	300	85
7	1000	83	9	615	76	10	325	92
6	1020	85	8	635	79	9	330	94
5	1035	86	7	655	81	8	335	95
4	1055	87	6	675	84	7	340	97
3	1075	89	5	700	87	6	350	100
2	1100	91	4	750	93			
1	1200	100	3	800	100			

Vertical

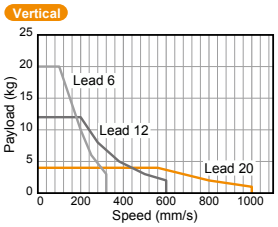

Quick reference

Lead 20 Payload (kg)	Speed (mm/sec)	%	Lead 12 Payload (kg)	Speed (mm/sec)	%	Lead 6 Payload (kg)	Speed (mm/sec)	%
4	560	56	12	200	33	20	100	31
3	680	68	10	240	40	15	150	46
2	800	80	9	260	43	12	180	56
1	1000	100	8	280	46	10	200	62
			7	310	51	9	210	65
			6	345	57	8	225	70
			5	380	63	7	235	73
			4	435	72	6	250	78
			3	500	83	5	270	84
			2	600	100	4	295	92
						3	320	100

SG07 Straight model S

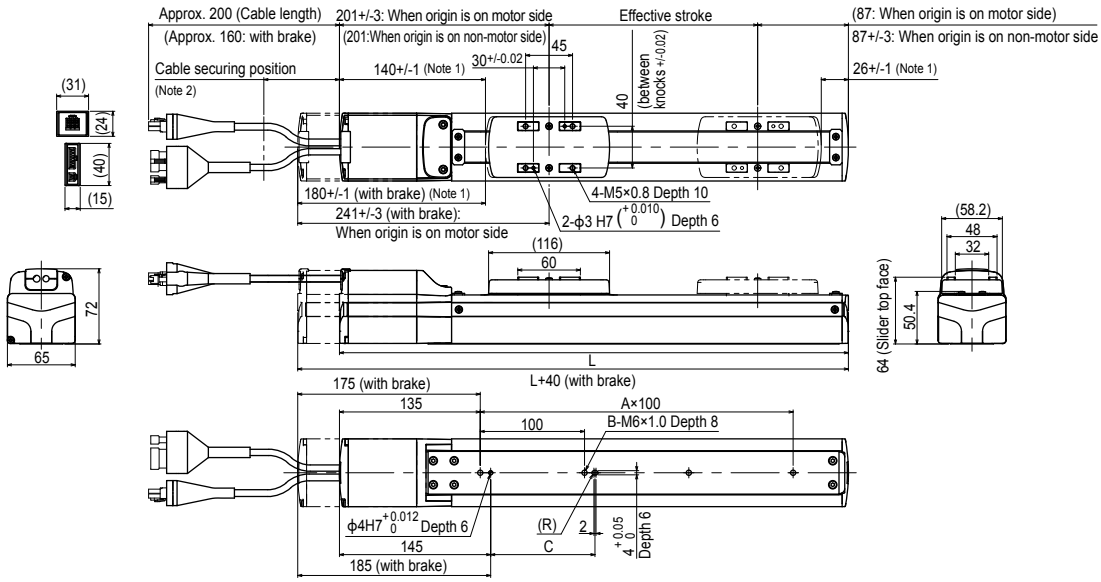

Effective stroke	50	100	150	200	250	300	350	400	450	500	550	600	650	700	750	800
L	338	388	438	488	538	588	638	688	738	788	838	888	938	988	1038	1088
A	1	2	2	3	3	4	4	5	5	6	6	7	7	8	8	9
B	2	3	3	4	4	5	5	6	6	7	7	8	8	9	9	10
C	100	100	100	100	100	100	400	400	400	400	400	400	700	700	700	700
Weight (kg) Note 4	2.9	3.2	3.4	3.6	3.9	4.1	4.3	4.6	4.8	5.0	5.3	5.5	5.7	5.9	6.1	6.3
Maximum speed for each stroke Note 5 (mm/sec) — Lead20 (Horizontal)	1200												1020	900	780	720
Lead20 (Vertical)	1000												1000			
Lead12 (Horizontal)	800												578	510	442	408
Lead12 (Vertical)	600															
Lead6 (Horizontal)	350												298	263	228	210
Lead6 (Vertical)	320															
Speed setting	–												85%	75%	65%	60%

Note 1. Stop positions are determined by the mechanical stoppers at both ends.
Note 2. Secure the cable with a tie-band 100mm or less from unit's end face to prevent the cable from being subjected to excessive loads.
Note 3. The cable's minimum bend radius is R30.
Note 4. These are the weights without a brake. The weights are 0.7kg heavier when equipped with a brake.
Note 5. When the stroke is longer than 600mm, resonance of the ball screw may occur depending on the operation conditions (critical speed). In this case, reduce the speed setting on the program by referring to the maximum speeds shown in the table at the below.

Controller TS-SH ▶ 490

SR03 Rod type

CE compliance | Origin on the non-motor side is selectable

Ordering method

SR03 - [ ] - [ ] - [ ] - [ ] - [ ] - [ ] - [ ] - [ ] - [ ] - [ ]

Model	Lead	Model	Brake	Origin position	Bracket plate	Stroke	Cable length Note 3
	12: 12mm 06: 6mm	S: Straight model R: Space-saving model Note 1 (motor installed on right) L: Space-saving model Note 1 (motor installed on left) U: Space-saving model Note 1 (motor installed on top)	N: With no brake B: With brake	N: Standard Note 2 Z: Non-motor side	N: No plate H: With plate V: With flange	50 to 200 (50mm pitch)	1K: 1m 3K: 3m 5K: 5m 10K: 10m

S2

Robot positioner	I/O
S2: TS-S2 Note 4	NP: NPN PN: PNP CC: CC-Link DN: DeviceNet™ EP: EtherNet/IP™ PT: PROFINET GW: No I/O board Note 5

SH

Robot positioner	I/O	Battery
SH: TS-SH	NP: NPN PN: PNP CC: CC-Link DN: DeviceNet™ EP: EtherNet/IP™ PT: PROFINET GW: No I/O board Note 5	B: With battery (Absolute) N: None (Incremental)

SD **1**

Robot driver	I/O cable
SD: TS-SD	1: 1m

Note 1. See P.129 for grease gun nozzles.
Note 2. If changing from the origin position at the time of purchase, the machine reference amount must be reset. For details, refer to the manual.
Note 3. The robot cable is flexible and resists bending.
Note 4. See P.498 for DIN rail mounting bracket.
Note 5. Select this section when using the gateway function. For details, see P.60.

Basic specifications

Motor		42 □ Step motor	
Resolution (Pulse/rotation)		20480	
Repeatability (mm)		+/-0.02	
Deceleration mechanism		Ball screw ϕ8 (Class C10)	
Ball screw lead (mm)		12	6
Maximum speed Note 1 (mm/sec)		500	250
Maximum payload (kg)	Horizontal	10	20
	Vertical	4	8
Max. pressing force (N)		75	100
Stroke (mm)		50 to 200 (50pitch)	
Lost motion		0.1mm or less	
Rotating backlash (°)		+/-1.0	
Overall length (mm)	Horizontal	Stroke+236.5	
	Vertical	Stroke+276.5	
Maximum outside dimension of body cross-section (mm)		W48 × H56.5	
Cable length (m)		Standard: 1 / Option: 3, 5, 10	

Note 1. The maximum speed needs to be changed in accordance with the payload.
See the "Speed vs. payload" graph shown on the right.
For details, see P. 128.

Speed vs. payload

Horizontal

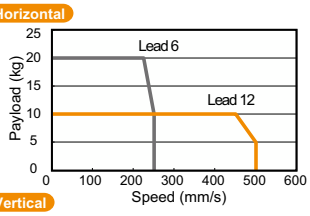

Vertical

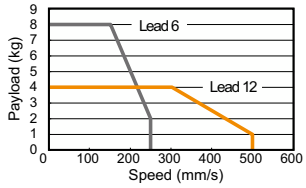

Running life

5000 km on models other than shown below.
Running life of only the model shown below becomes shorter than 5000 km depending on the payload, so check the running life curve.

Vertical Lead 12

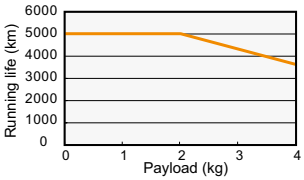

Note. See P.129 for running life distance to life time conversion example.

Motor installation (Space-saving model)

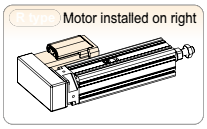

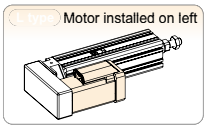

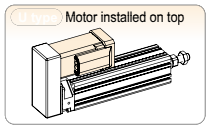

Controller

Controller	Operation method
TS-S2 TS-SH	I/O point trace / Remote command

Controller	Operation method
TS-SD	Pulse train control

SR03 Straight model S

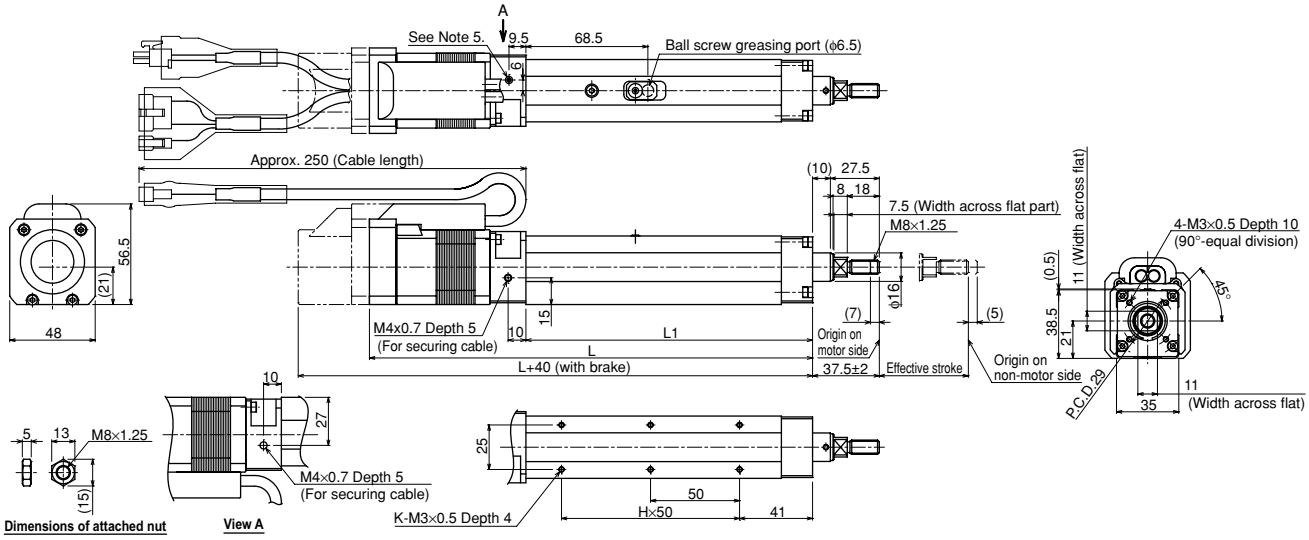

Option: Horizontal installation plate (foot)

* Contents of option: Plate, 2 pcs.
See our robot manuals for additional settings.

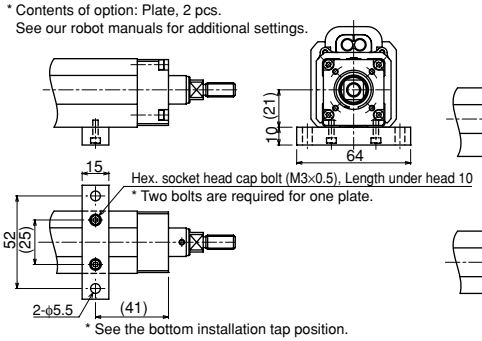

Option: Vertical installation plate (flange)

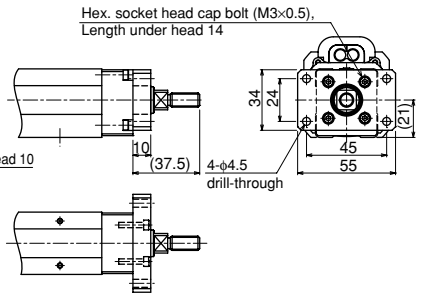

Effective stroke	50	100	150	200
L1	161	211	261	311
L	249	299	349	399
H	2	3	4	5
K	6	8	10	12
Weight (kg) Note 7	1.1	1.3	1.4	1.6

Note 1. It is possible to apply only the axial load.
Use the external guide together so that any radial load is not applied to the rod.
Note 2. The orientation of the width across flat part is undefined to the base surface.
Note 3. Use the support guide together to maintain the straightness.
Note 4. When running the cables, secure cables so that any load is not applied to them.
Note 5. Remove the M4 hex. socket head cap set bolts and use them to secure the cables. (Effective screw thread depth 5)
Note 6. The cable's minimum bend radius is R30.
Note 7. Models with a brake will be 0.2kg heavier.
Note 8. Distance to mechanical stopper.

SR03

SR03 Space-saving model (motor installed on right) R

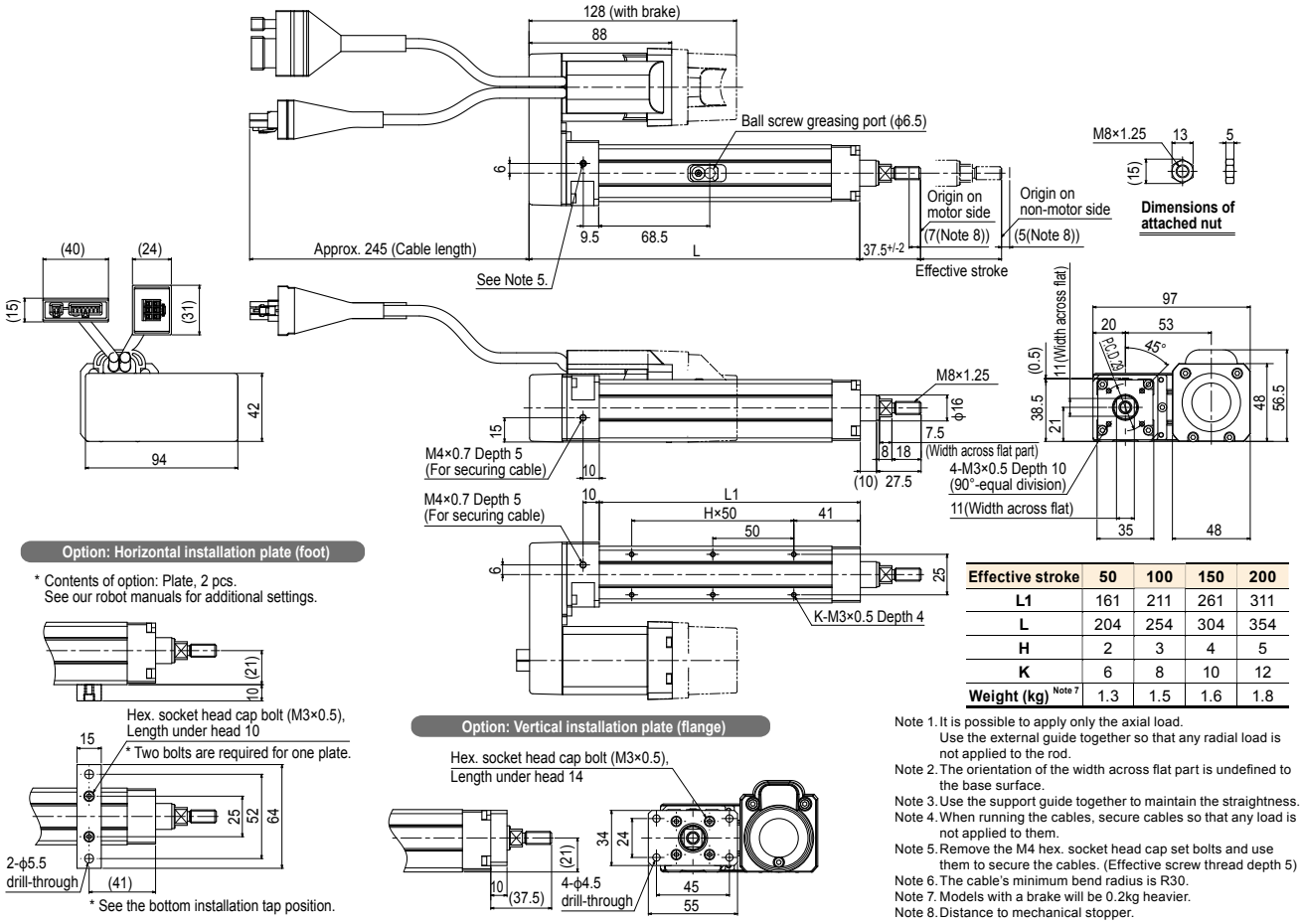

Effective stroke	50	100	150	200
L1	161	211	261	311
L	204	254	304	354
H	2	3	4	5
K	6	8	10	12
Weight (kg) Note 7	1.3	1.5	1.6	1.8

Note 1. It is possible to apply only the axial load.
Use the external guide together so that any radial load is not applied to the rod.
Note 2. The orientation of the width across flat part is undefined to the base surface.
Note 3. Use the support guide together to maintain the straightness.
Note 4. When running the cables, secure cables so that any load is not applied to them.
Note 5. Remove the M4 hex. socket head cap set bolts and use them to secure the cables. (Effective screw thread depth 5)
Note 6. The cable's minimum bend radius is R30.
Note 7. Models with a brake will be 0.2kg heavier.
Note 8. Distance to mechanical stopper.

SR03 Space-saving model (motor installed on left) L

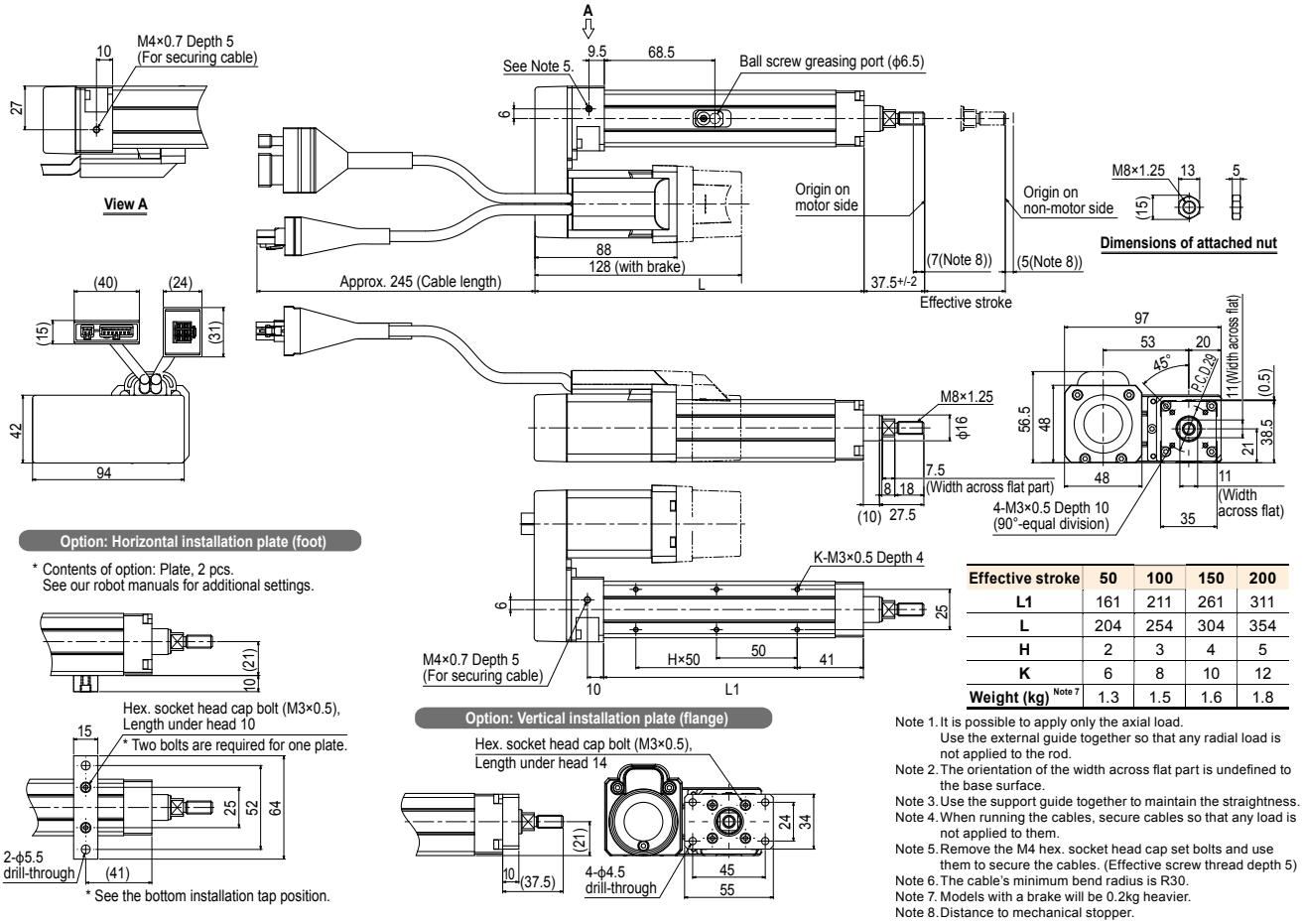

Effective stroke	50	100	150	200
L1	161	211	261	311
L	204	254	304	354
H	2	3	4	5
K	6	8	10	12
Weight (kg) Note 7	1.3	1.5	1.6	1.8

Note 1. It is possible to apply only the axial load.
Use the external guide together so that any radial load is not applied to the rod.
Note 2. The orientation of the width across flat part is undefined to the base surface.
Note 3. Use the support guide together to maintain the straightness.
Note 4. When running the cables, secure cables so that any load is not applied to them.
Note 5. Remove the M4 hex. socket head cap set bolts and use them to secure the cables. (Effective screw thread depth 5)
Note 6. The cable's minimum bend radius is R30.
Note 7. Models with a brake will be 0.2kg heavier.
Note 8. Distance to mechanical stopper.

SR03 Space-saving model (motor installed on top) U

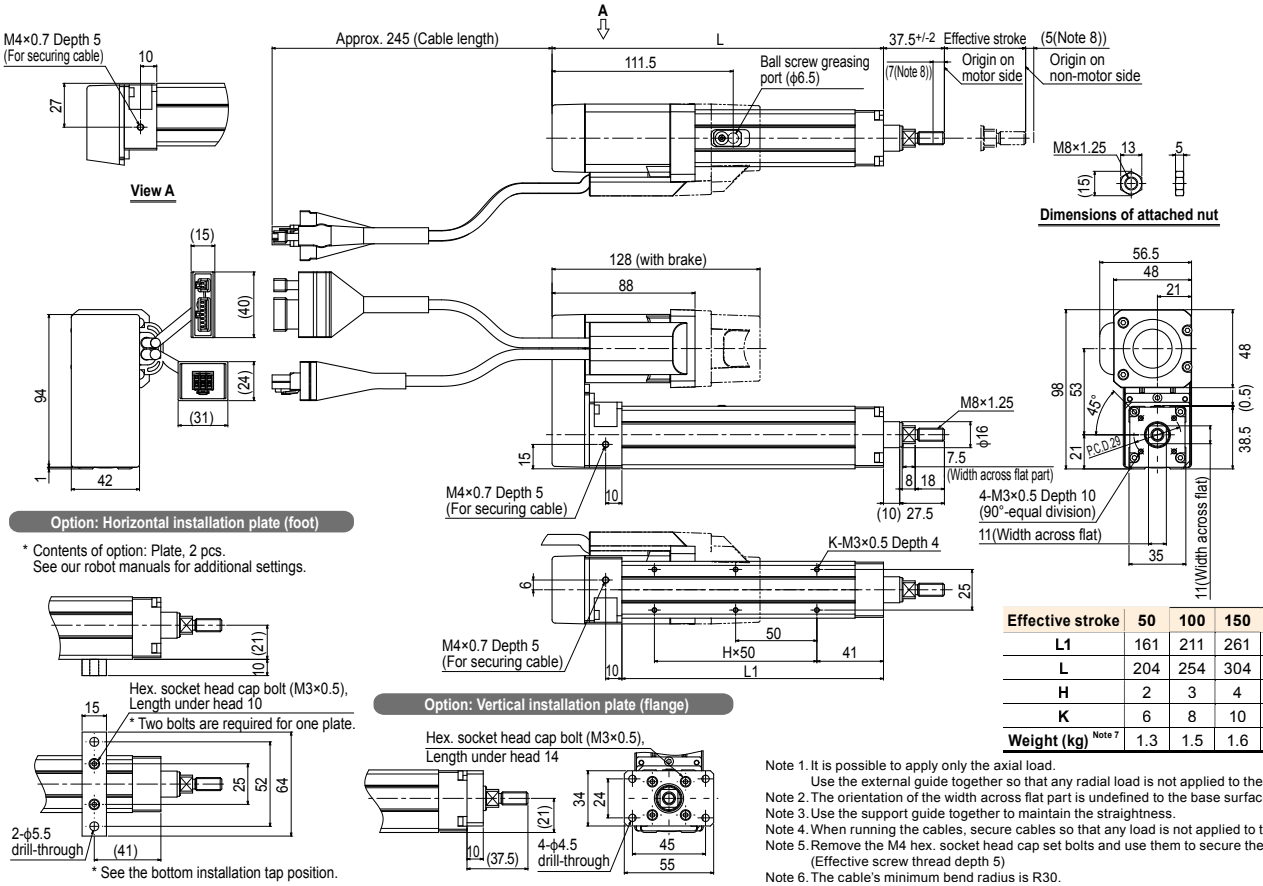

Effective stroke	50	100	150	200
L1	161	211	261	311
L	204	254	304	354
H	2	3	4	5
K	6	8	10	12
Weight (kg) Note 7	1.3	1.5	1.6	1.8

Note 1. It is possible to apply only the axial load.
Use the external guide together so that any radial load is not applied to the rod.
Note 2. The orientation of the width across flat part is undefined to the base surface.
Note 3. Use the support guide together to maintain the straightness.
Note 4. When running the cables, secure cables so that any load is not applied to them.
Note 5. Remove the M4 hex. socket head cap set bolts and use them to secure the cables.
(Effective screw thread depth 5)
Note 6. The cable's minimum bend radius is R30.
Note 7. Models with a brake will be 0.2kg heavier.
Note 8. Distance to mechanical stopper.

SRD03 Rod type (With support guide)

- CE compliance
- Origin on the non-motor side is selectable: Lead 6, 12

Ordering method

SRD03 - [ ] - [ ] - [ ] - [ ] - [ ] - [ ] - [ ] - [ ] - [ ] - [ ]

Model	Lead	Model	Brake	Origin position	Bracket plate	Stroke	Cable length Note 3
	12: 12mm 06: 6mm	S: Straight model U: Space-saving model Note 1 (motor installed on top)	N: With no brake B: With brake	N: Standard Note 2 Z: Non-motor side	N: No plate H: With plate	50 to 200 (50mm pitch)	1K: 1m 3K: 3m 5K: 5m 10K: 10m

S2

Robot positioner	I/O
S2: TS-S2 Note 4	NP: NPN PN: PNP CC: CC-Link DN: DeviceNet™ EP: EtherNet/IP™ PT: PROFINET GW: No I/O board Note 5

SH

Robot positioner	I/O	Battery
SH: TS-SH	NP: NPN PN: PNP CC: CC-Link DN: DeviceNet™ EP: EtherNet/IP™ PT: PROFINET GW: No I/O board Note 5	B: With battery (Absolute) N: None (Incremental)

SD 1

Robot driver	I/O cable
SD: TS-SD	1: 1m

Note 1. See P.129 for grease gun nozzles.
Note 2. If changing from the origin position at the time of purchase, the machine reference amount must be reset. For details, refer to the manual.
Note 3. The robot cable is flexible and resists bending.
Note 4. See P.498 for DIN rail mounting bracket.
Note 5. Select this selection when using the gateway function. For details, see P.60.

Basic specifications

Motor		42 □ Step motor	
Resolution (Pulse/rotation)		20480	
Repeatability (mm)		+/-0.02	
Deceleration mechanism		Ball screw ϕ8 (Class C10)	
Ball screw lead (mm)		12	6
Maximum speed Note 1 (mm/sec)		500	250
Maximum payload (kg)	Horizontal	10	20
	Vertical	3.5	7.5
Max. pressing force (N)		75	100
Stroke (mm)		50 to 200 (50pitch)	
Lost motion		0.1mm or less	
Rotating backlash (°)		+/-0.05	
Overall length (mm)	Horizontal	Stroke+236.5	
	Vertical	Stroke+276.5	
Maximum outside dimension of body cross-section (mm)		W48 × H56.5	
Cable length (m)		Standard: 1 / Option: 3, 5, 10	

Note 1. The maximum speed needs to be changed in accordance with the payload.
See the "Speed vs. payload" graph shown on the right.
For details, see P. 128.

Speed vs. payload

Horizontal

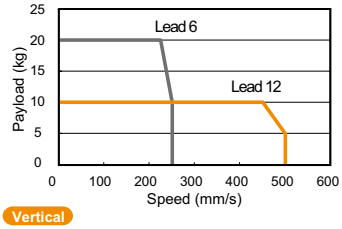

Vertical

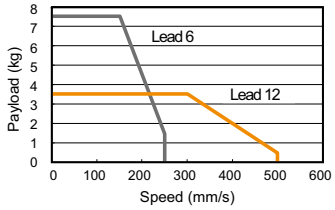

Running life

5000 km on models other than shown below.
Running life of only the model shown below becomes shorter than 5000 km depending on the payload, so check the running life curve.

Vertical Lead 12

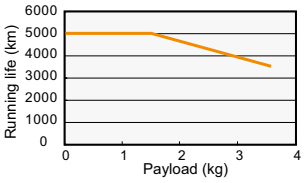

Note. See P.129 for running life distance to life time conversion example.

Controller

Controller	Operation method
TS-S2 TS-SH	I/O point trace / Remote command

Controller	Operation method
TS-SD	Pulse train control

SRD03 Straight model S

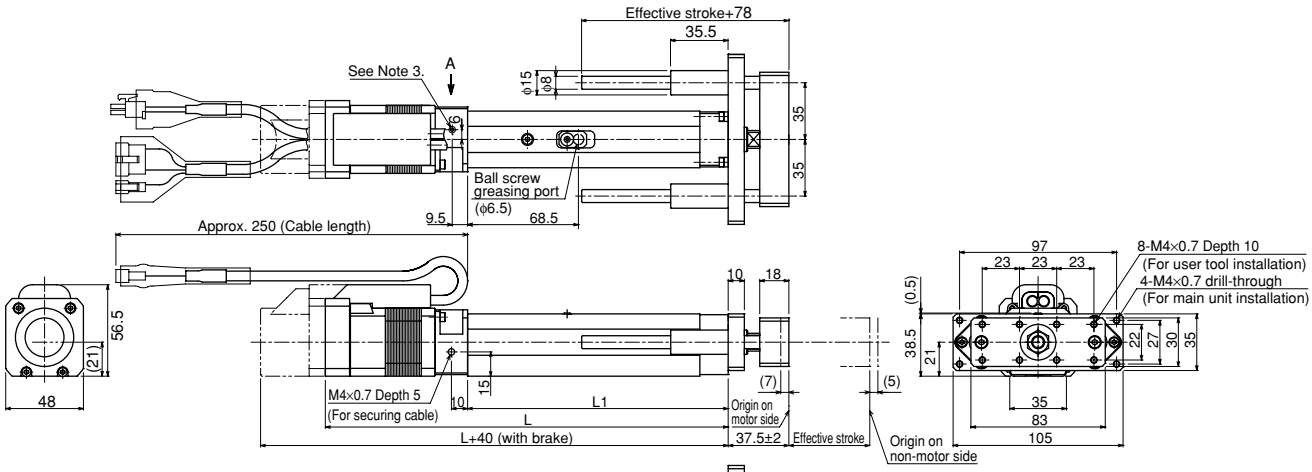

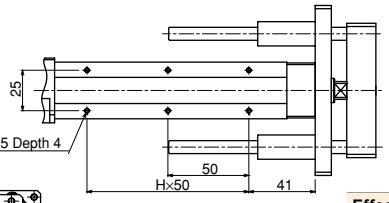

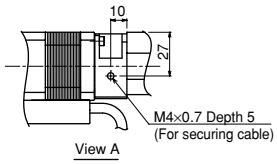

Option: Horizontal installation plate (foot)

* Contents of option: Plate, 2 pcs.
See our robot manuals for additional settings.

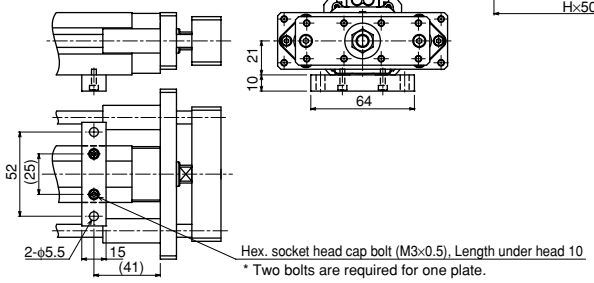

* See the bottom installation tap position.

Effective stroke	50	100	150	200
L1	161	211	261	311
L	249	299	349	399
H	2	3	4	5
K	6	8	10	12
Weight (kg) Note 5	1.5	1.7	1.9	2.1

Note 1.It is possible to apply only the axial load.
Use the external guide together so that any radial load is not applied to the rod.
Note 2.When running the cables, secure cables so that any load is not applied to them.
Note 3.Remove the M4 hex. socket head cap set bolts and use them to secure the cables. (Effective screw thread depth 5)
Note 4.The cable's minimum bend radius is R30.
Note 5.Models with a brake will be 0.2kg heavier.
Note 6.Distance to mechanical stopper.

Controller	TS-S2 ▶ 490	TS-SH ▶ 490	TS-SD ▶ 500

SRD03 Space-saving model (motor installed on top) U

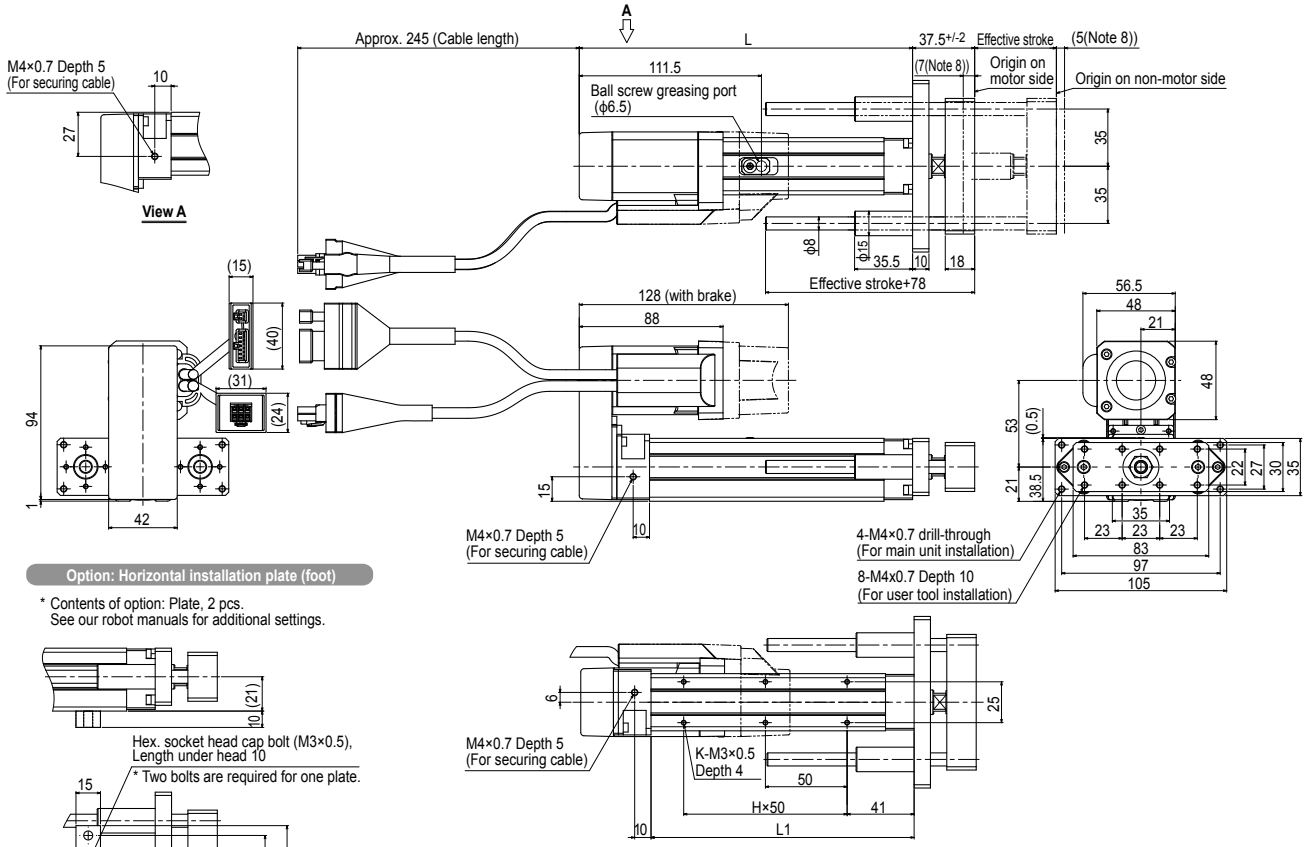

Option: Horizontal installation plate (foot)

* Contents of option: Plate, 2 pcs.
See our robot manuals for additional settings.

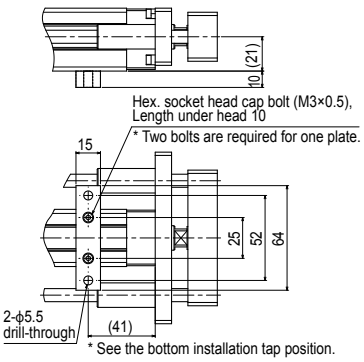

Effective stroke	50	100	150	200
L1	161	211	261	311
L	204	254	304	354
H	2	3	4	5
K	6	8	10	12
Weight (kg) Note 7	1.7	1.9	2.1	2.3

Note 1. It is possible to apply only the axial load.
Use the external guide together so that any radial load is not applied to the rod.
Note 2. The orientation of the width across flat part is undefined to the base surface.
Note 3. Use the support guide together to maintain the straightness.
Note 4. When running the cables, secure cables so that any load is not applied to them.
Note 5. Remove the M4 hex. socket head cap set bolts and use them to secure the cables. (Effective screw thread depth 5)
Note 6. The cable's minimum bend radius is R30.
Note 7. Models with a brake will be 0.2kg heavier.
Note 8. Distance to mechanical stopper.

SR04 Rod type

CE compliance

Origin on the non-motor side is selectable: Lead 6, 12

Ordering method

SR04 - [ ] - [ ] - [ ] - [ ] - [ ] - [ ] - [ ] - [ ] - [ ] - [ ]

Model	Lead	Model	Brake	Origin position Note 2	Bracket plate	Stroke	Cable length Note 4
	12: 12mm 06: 6mm 02: 2mm	S: Straight model R: Space-saving model Note 1 (motor installed on right) L: Space-saving model Note 1 (motor installed on left)	N: With no brake B: With brake	N: Standard Note 3 Z: Non-motor side	N: No plate H: With plate V: With flange	50 to 300 (50mm pitch)	1K: 1m 3K: 3m 5K: 5m 10K: 10m

S2

Robot positioner	I/O
S2: TS-S2 Note 5	NP: NPN PN: PNP CC: CC-Link DN: DeviceNet™ EP: EtherNet/IP™ PT: PROFINET GW: No I/O board Note 6

SH

Robot positioner	I/O	Battery
SH: TS-SH	NP: NPN PN: PNP CC: CC-Link DN: DeviceNet™ EP: EtherNet/IP™ PT: PROFINET GW: No I/O board Note 6	B: With battery (Absolute) N: None (Incremental)

SD

Robot driver	I/O cable
SD: TS-SD	1: 1m

Note 1. See P.129 for grease gun nozzles.
Note 2. When "2mm lead" is selected, the origin position cannot be changed (to non-motor side).
Note 3. If changing from the origin position at the time of purchase, the machine reference amount must be reset. For details, refer to the manual.
Note 4. The robot cable is flexible and resists bending.
Note 5. See P.498 for DIN rail mounting bracket.
Note 6. Select this selection when using the gateway function. For details, see P.60.

Basic specifications

Motor		42 □ Step motor	
Resolution (Pulse/rotation)		20480	
Repeatability (mm)		+/-0.02	
Deceleration mechanism		Ball screw ϕ8 (Class C10)	Ball screw ϕ10 (Class C10)
Ball screw lead (mm)		12	6	2
Maximum speed Note 1 (mm/sec)		500	250	80
Maximum payload (kg)	Horizontal	25	40	45
	Vertical	5	12	25
Max. pressing force (N)		150	300	600
Stroke (mm)		50 to 300 (50pitch)		
Lost motion		0.1mm or less		
Rotating backlash (°)		+/-1.0		
Overall length (mm)	Horizontal	Stroke+263		
	Vertical	Stroke+303		
Maximum outside dimension of body cross-section (mm)		W48 × H58		
Cable length (m)		Standard: 1 / Option: 3, 5, 10		

Note 1. The maximum speed needs to be changed in accordance with the payload.
See the "Speed vs. payload" graph shown on the right. For details, see P. 128. Additionally, when the stroke is long, the maximum speed is decreased due to the critical speed of the ball screw. See the maximum speed table shown at the lower portion of the drawing.

Speed vs. payload

Horizontal

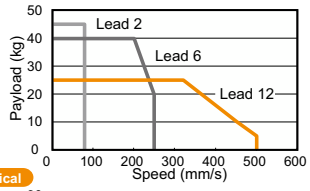

Vertical

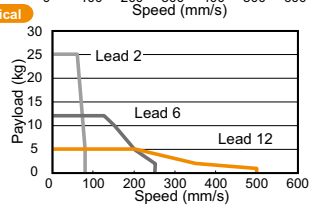

Running life

5000 km on models other than shown below.
Running life of only the model shown below becomes shorter than 5000 km depending on the payload, so check the running life curve.

Vertical Lead 2

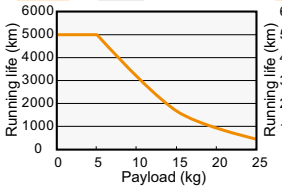

Vertical Lead 12

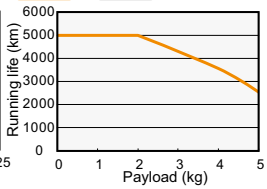

Note. See P.129 for running life distance to life time conversion example.

Motor installation (Space-saving model)

R type Motor installed on right

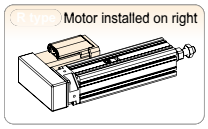

L type Motor installed on left

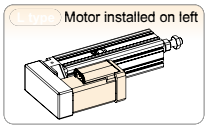

Controller

Controller	Operation method
TS-S2 TS-SH	I/O point trace / Remote command

Controller	Operation method
TS-SD	Pulse train control

SR04 Straight model S

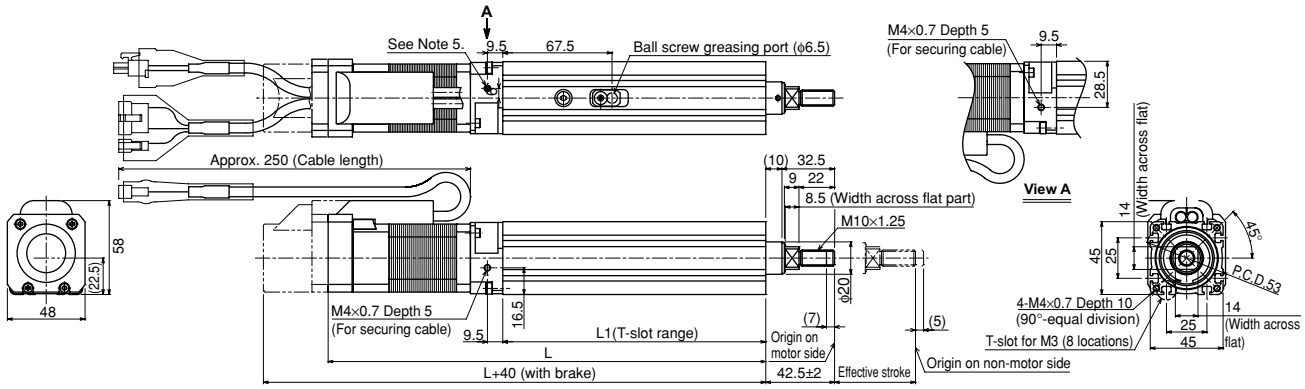

Option: Horizontal installation plate (foot)

* Contents of option: Plate, 2 pcs., Nut, 12 pcs.
See our robot manuals for additional settings.

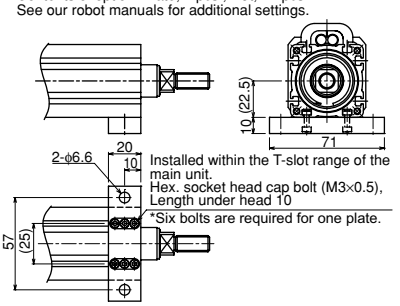

Option: Vertical installation plate (flange)

Hex. socket head cap bolt (M4×0.7), Length under head 14

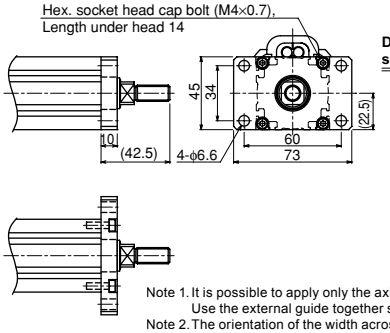

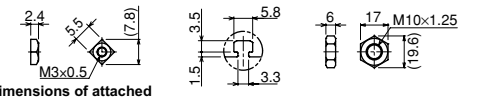

Dimensions of attached square nut for T-slot (6 pcs.) | Details of T-slot | Dimensions of attached nut

Effective stroke		50	100	150	200	250	300
L1		162.5	212.5	262.5	312.5	362.5	412.5
L		270.5	320.5	370.5	420.5	470.5	520.5
Weight (kg) Note 8		1.4	1.7	1.9	2.2	2.4	2.7
Maximum speed for each stroke (mm/sec)	Lead 12	500				440	320
	Lead 6	250				220	160
	Lead 2	80				72	53

Note 1. It is possible to apply only the axial load.
Use the external guide together so that any radial load is not applied to the rod.
Note 2. The orientation of the width across flat part is undefined to the base surface.
Note 3. Use the support guide together to maintain the straightness.
Note 4. For lead 2mm specifications, the origin on the non-motor side cannot be set.
Note 5. When running the cables, secure cables so that any load is not applied to them.
Note 6. Remove the M4 hex. socket head cap set bolts and use them to secure the cables. (Effective screw thread depth 5)
Note 7. The cable's minimum bend radius is R30.
Note 8. Models with a brake will be 0.2kg heavier.
Note 9. Distance to mechanical stopper.

Controller	TS-S2 ▶ 490	TS-SH ▶ 490	TS-SD ▶ 500

SR04 Space-saving model (motor installed on right) R

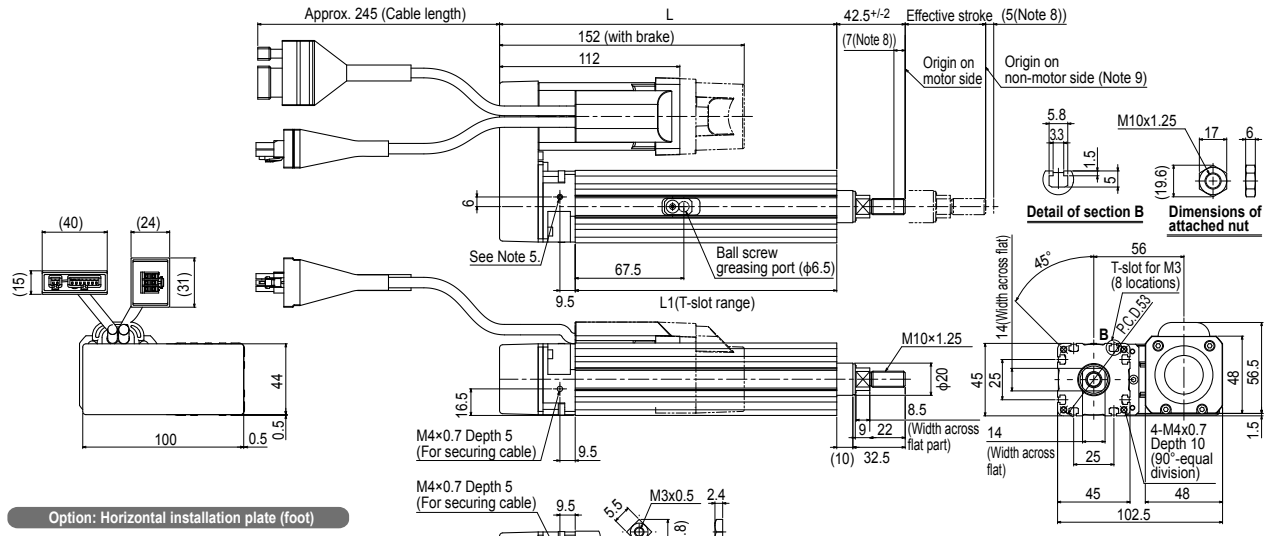

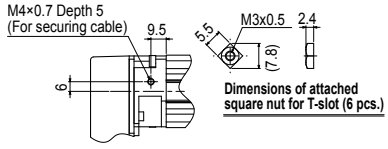

Option: Horizontal installation plate (foot)

* Contents of option: Plate, 2 pcs., Nut, 12 pcs.
See our robot manuals for additional settings.

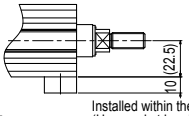

Option: Vertical installation plate (flange)

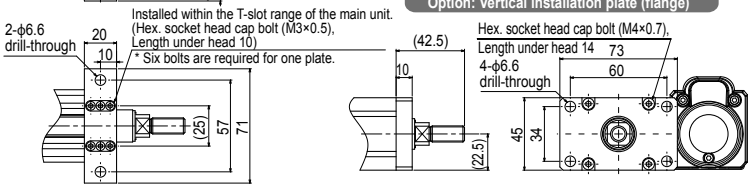

Effective stroke		50	100	150	200	250	300
L1		162.5	212.5	262.5	312.5	362.5	412.5
L		209.5	259.5	309.5	359.5	409.5	459.5
Weight (kg) Note 7		1.6	1.9	2.1	2.4	2.6	2.9
Maximum speed for each stroke (mm/sec)	Lead 12	500				440	320
	Lead 6	250				220	160
	Lead 2	80				72	53

Note 1. It is possible to apply only the axial load.
Use the external guide together so that any radial load is not applied to the rod.
Note 2. The orientation of the width across flat part is undefined to the base surface.
Note 3. Use the support guide together to maintain the straightness.
Note 4. When running the cables, secure cables so that any load is not applied to them.
Note 5. Remove the M4 hex. socket head cap set bolts and use them to secure the cables. (Effective screw thread depth 5)
Note 6. The cable's minimum bend radius is R30.
Note 7. Models with a brake will be 0.2kg heavier.
Note 8. Distance to mechanical stopper.
Note 9. For lead 2mm specifications, the origin on the non-motor side cannot be set.
Note 10. This unit can be installed with the motor facing up (turned 90 degrees from the position in this drawing).

SR04 Space-saving model (motor installed on left) L

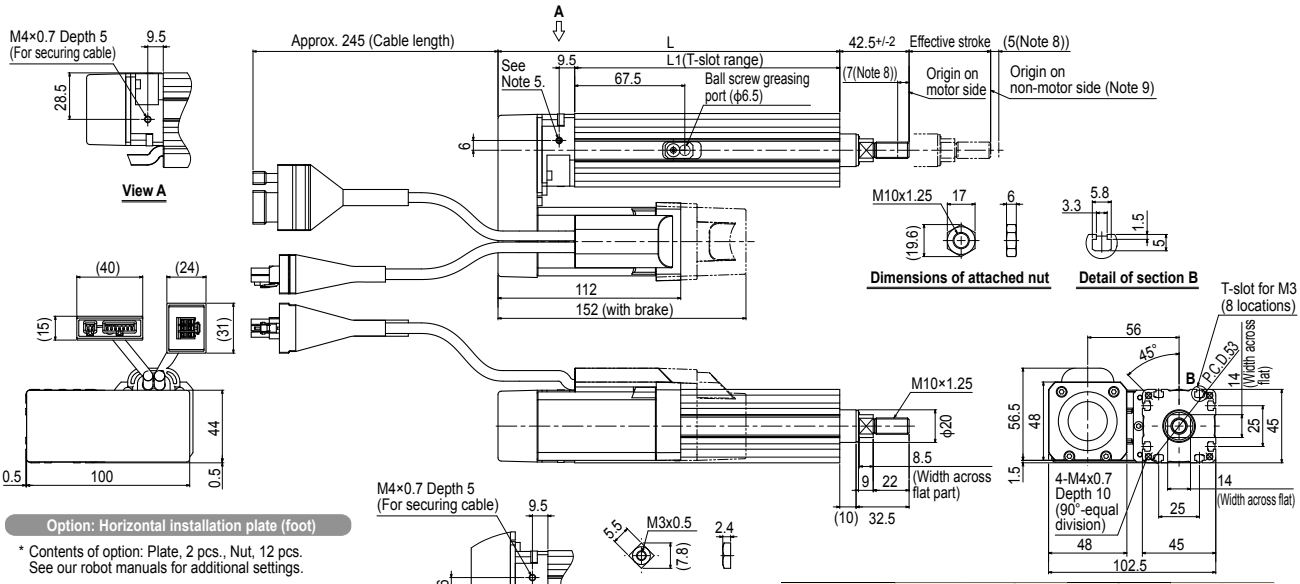

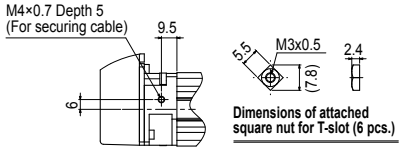

Option: Horizontal installation plate (foot)

* Contents of option: Plate, 2 pcs., Nut, 12 pcs.
See our robot manuals for additional settings.

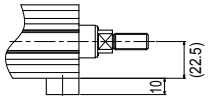

Option: Vertical installation plate (flange)

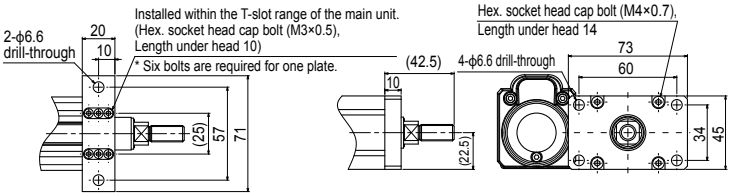

Effective stroke		50	100	150	200	250	300
L1		162.5	212.5	262.5	312.5	362.5	412.5
L		209.5	259.5	309.5	359.5	409.5	459.5
Weight (kg) Note 7		1.6	1.9	2.1	2.4	2.6	2.9
Maximum speed for each stroke (mm/sec)	Lead 12	500				440	320
	Lead 6	250				220	160
	Lead 2	80				72	53

Note 1. It is possible to apply only the axial load.
Use the external guide together so that any radial load is not applied to the rod.
Note 2. The orientation of the width across flat part is undefined to the base surface.
Note 3. Use the support guide together to maintain the straightness.
Note 4. When running the cables, secure cables so that any load is not applied to them.
Note 5. Remove the M4 hex. socket head cap set bolts and use them to secure the cables. (Effective screw thread depth 5)
Note 6. The cable's minimum bend radius is R30.
Note 7. Models with a brake will be 0.2kg heavier.
Note 8. Distance to mechanical stopper.
Note 9. For lead 2mm specifications, the origin on the non-motor side cannot be set.
Note 10. This unit can be installed with the motor facing up (turned 90 degrees from the position in this drawing).

SRD04 Rod type (With support guide)

CE compliance

Origin on the non-motor side is selectable: Lead 6, 12

Ordering method

SRD04 - [ ] - [ ] - [ ] - [ ] - [ ] - [ ] - [ ] - [ ] - [ ] - [ ] - [ ] - [ ] - [ ] - [ ] - [ ]

Model	Lead	Model	Brake	Origin position Note 2	Bracket plate	Stroke	Cable length Note 4
	12: 12mm 06: 6mm 02: 2mm	S: Straight model U: Space-saving model Note 1 (motor installed on top)	N: With no brake B: With brake	N: Standard Note 3 Z: Non-motor side	N: No plate H: With plate	50 to 300 (50mm pitch)	1K: 1m 3K: 3m 5K: 5m 10K: 10m

S2

Robot positioner	I/O
S2: TS-S2 Note 5	NP: NPN PN: PNP CC: CC-Link DN: DeviceNet™ EP: EtherNet/IP™ PT: PROFINET GW: No I/O board Note 6

SH

Robot positioner	I/O	Battery
SH: TS-SH	NP: NPN PN: PNP CC: CC-Link DN: DeviceNet™ EP: EtherNet/IP™ PT: PROFINET GW: No I/O board Note 6	B: With battery (Absolute) N: None (Incremental)

SD **1**

Robot driver	I/O cable
SD: TS-SD	1: 1m

Note 1. See P.129 for grease gun nozzles.
Note 2. When "2mm lead" is selected, the origin position cannot be changed (to non-motor side).
Note 3. If changing from the origin position at the time of purchase, the machine reference amount must be reset. For details, refer to the manual.
Note 4. The robot cable is flexible and resists bending.
Note 5. See P.498 for DIN rail mounting bracket.
Note 6. Select this selection when using the gateway function. For details, see P.60.

Basic specifications

Motor		42 □ Step motor	
Resolution (Pulse/rotation)		20480	
Repeatability (mm)		+/-0.02	
Deceleration mechanism		Ball screw ϕ8 (Class C10)	Ball screw ϕ10 (Class C10)
Ball screw lead (mm)		12	6	2
Maximum speed Note 1 (mm/sec)		500	250	80
Maximum payload (kg)	Horizontal	25	40	45
	Vertical	4	11	24
Max. pressing force (N)		150	300	600
Stroke (mm)		50 to 300 (50pitch)	
Lost motion		0.1mm or less	
Rotating backlash (°)		+/-0.05	
Overall length (mm)	Horizontal	Stroke+263	
	Vertical	Stroke+303	
Maximum outside dimension of body cross-section (mm)		W48 × H58	
Cable length (m)		Standard: 1 / Option: 3, 5, 10	

Note 1. The maximum speed needs to be changed in accordance with the payload.
See the "Speed vs. payload" graph shown on the right.
For details, see P. 128.
Additionally, when the stroke is long, the maximum speed is decreased due to the critical speed of the ball screw.
See the maximum speed table shown at the lower portion of the drawing.

Speed vs. payload

Horizontal

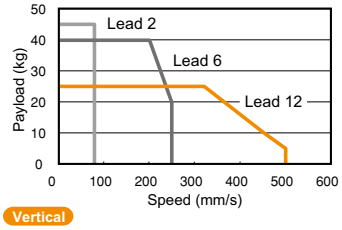

Vertical

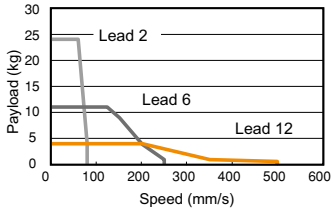

Running life

5000 km on models other than shown below.
Running life of only the model shown below becomes shorter than 5000 km depending on the payload, so check the running life curve.

Vertical Lead 2

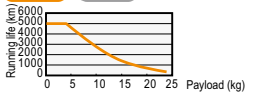

Vertical Lead 12

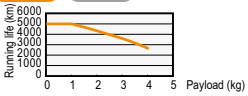

Note. See P.129 for running life distance to life time conversion example.

Controller

Controller	Operation method
TS-S2 TS-SH	I/O point trace / Remote command

Controller	Operation method
TS-SD	Pulse train control

SRD04 Straight model S

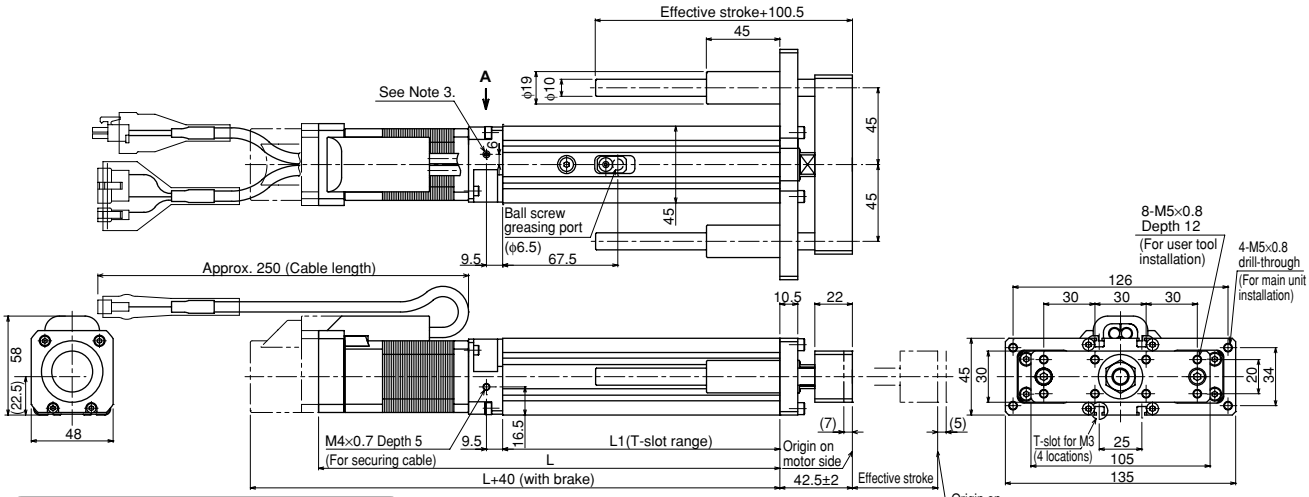

Option: Horizontal installation plate (foot)

* Contents of option: Plate, 2 pcs., Nut, 12 pcs.
See our robot manuals for additional settings.

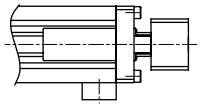

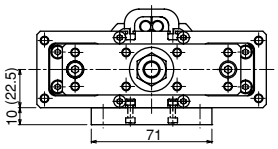

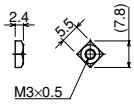

Dimensions of attached square nut for T-slot (6 pcs.)

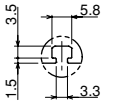

Details of T-slot

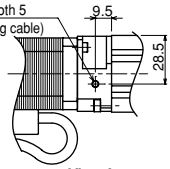

View A

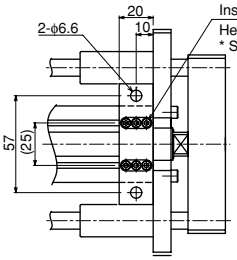

Installed within the T-slot range of the main unit.
Hex. socket head cap bolt (M3×0.5), Length under head 10
* Six bolts are required for one plate.

Effective stroke		50	100	150	200	250	300
L1		162.5	212.5	262.5	312.5	362.5	412.5
L		270.5	320.5	370.5	420.5	470.5	520.5
Weight (kg) Note 6		2.0	2.4	2.7	3.0	3.3	3.7
Maximum speed for each stroke (mm/sec)	Lead 12	500				440	320
	Lead 6	250				220	160
	Lead 2	80				72	53

Note 1. It is possible to apply only the axial load.
Use the external guide together so that any radial load is not applied to the rod.
Note 2. For lead 2mm specifications, the origin on the non-motor side cannot be set.
Note 3. When running the cables, secure cables so that any load is not applied to them.
Note 4. Remove the M4 hex. socket head cap set bolts and use them to secure the cables. (Effective screw thread depth 5)
Note 5. The cable's minimum bend radius is R30.
Note 6. Models with a brake will be 0.2kg heavier.
Note 7. Distance to mechanical stopper.

Controller TS-S2 ▶ 490 TS-SH ▶ 490 TS-SD ▶ 500

SRD04 Space-saving model (motor installed on top) U

Option: Horizontal installation plate (foot)

* Contents of option: Plate, 2 pcs., Nut, 12 pcs.
See our robot manuals for additional settings.

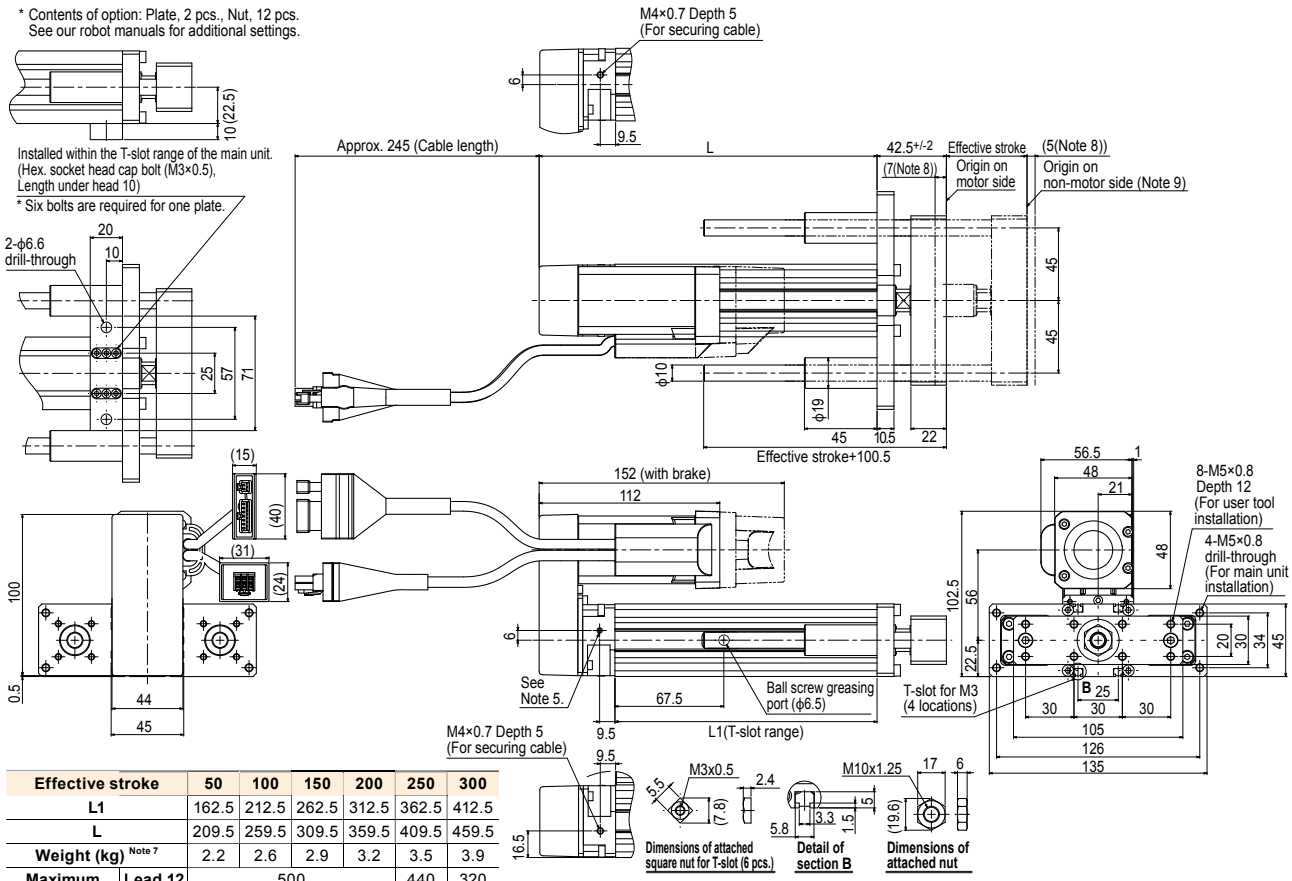

Effective stroke		50	100	150	200	250	300
L1		162.5	212.5	262.5	312.5	362.5	412.5
L		209.5	259.5	309.5	359.5	409.5	459.5
Weight (kg) Note 7		2.2	2.6	2.9	3.2	3.5	3.9
Maximum speed for each stroke (mm/sec)	Lead 12	500				440	320
	Lead 6	250				220	160
	Lead 2	80				72	53

Note 1. It is possible to apply only the axial load.
Use the external guide together so that any radial load is not applied to the rod.
Note 2. The orientation of the width across flat part is undefined to the base surface.
Note 3. Use the support guide together to maintain the straightness.
Note 4. When running the cables, secure cables so that any load is not applied to them.
Note 5. Remove the M4 hex. socket head cap set bolts and use them to secure the cables. (Effective screw thread depth 5)
Note 6. The cable's minimum bend radius is R30.
Note 7. Models with a brake will be 0.2kg heavier.
Note 8. Distance to mechanical stopper.
Note 9. For lead 2mm specifications, the origin on the non-motor side cannot be set.

SR05 Rod type

CE compliance

Origin on the non-motor side is selectable: Lead 6, 12

Ordering method

SR05 - [ ] - [ ] - [ ] - [ ] - [ ] - [ ] - [ ]

Model	Lead	Model	Brake	Origin position Note 2	Bracket plate	Stroke	Cable length Note 4
	12: 12mm 06: 6mm 02: 2mm	S: Straight model R: Space-saving model Note 1 (motor installed on right) L: Space-saving model Note 1 (motor installed on left)	N: With no brake B: With brake	N: Standard Note 3 Z: Non-motor side	N: No plate H: With plate V: With flange	50 to 300 (50mm pitch)	1K: 1m 3K: 3m 5K: 5m 10K: 10m

Note 1. See P.129 for grease gun nozzles.
Note 2. When "2mm lead" is selected, the origin position cannot be changed (to non-motor side).
Note 3. If changing from the origin position at the time of purchase, the machine reference amount must be reset. For details, refer to the manual.
Note 4. The robot cable is flexible and resists bending.
Note 5. See P.498 for DIN rail mounting bracket.
Note 6. Select this selection when using the gateway function. For details, see P.60.

S2

Robot positioner	I/O
S2: TS-S2 Note 5	NP: NPN PN: PNP CC: CC-Link DN: DeviceNet™ EP: EtherNet/IP™ PT: PROFINET GW: No I/O board Note 6

SH

Robot positioner	I/O	Battery
SH: TS-SH	NP: NPN PN: PNP CC: CC-Link DN: DeviceNet™ EP: EtherNet/IP™ PT: PROFINET GW: No I/O board Note 6	B: With battery (Absolute) N: None (Incremental)

SD 1

Robot driver	I/O cable
SD: TS-SD	1: 1m

Basic specifications

Motor	56 □ Step motor		
Resolution (Pulse/rotation)	20480		
Repeatability (mm)	+/-0.02		
Deceleration mechanism	Ball screw ϕ12 (Class C10)		
Ball screw lead (mm)	12	6	2
Maximum speed Note 1 (mm/sec)	300	150	50
Maximum payload (kg) Horizontal	50	55	60
Maximum payload (kg) Vertical	10	20	30
Max. pressing force (N)	250	550	900
Stroke (mm)	50 to 300 (50pitch)		
Lost motion	0.1mm or less		
Rotating backlash (°)	+/-1.0		
Overall length (mm) Horizontal	Stroke+276		
Overall length (mm) Vertical	Stroke+316		
Maximum outside dimension of body cross-section (mm)	W56.4 × H71		
Cable length (m)	Standard: 1 / Option: 3, 5, 10		

Note 1. The maximum speed needs to be changed in accordance with the payload.
See the "Speed vs. payload" graph shown on the right.
For details, see P. 128.

Speed vs. payload

Horizontal

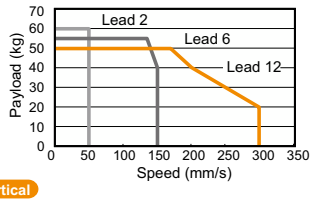

Vertical

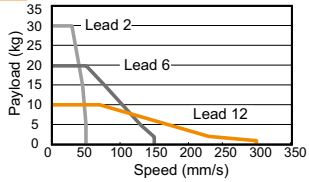

Running life

5000 km on models other than shown below.
Running life of only the model shown below becomes shorter than 5000 km depending on the payload, so check the running life curve.

Vertical Lead 2

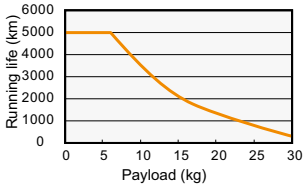

Note. See P.129 for running life distance to life time conversion example.

Motor installation (Space-saving model)

R type Motor installed on right

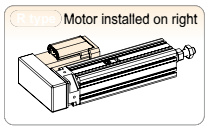

L type Motor installed on left

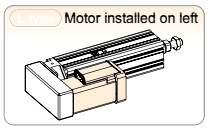

Controller

Controller	Operation method
TS-S2 TS-SH	I/O point trace / Remote command

Controller	Operation method
TS-SD	Pulse train control

SR05 Straight model S

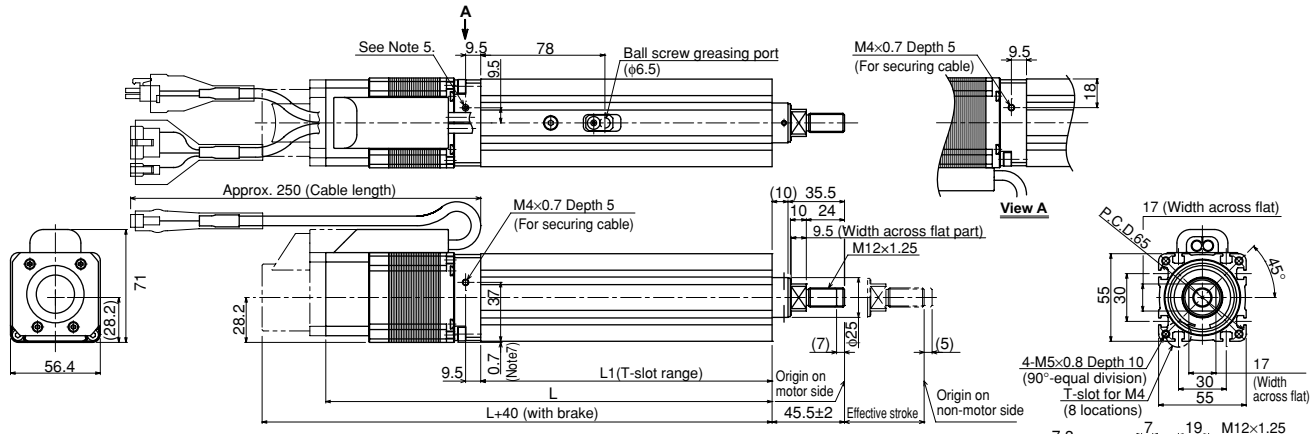

Option: Horizontal installation plate (foot)

* Contents of option: Plate, 2 pcs., Nut, 8 pcs.
See our robot manuals for additional settings.

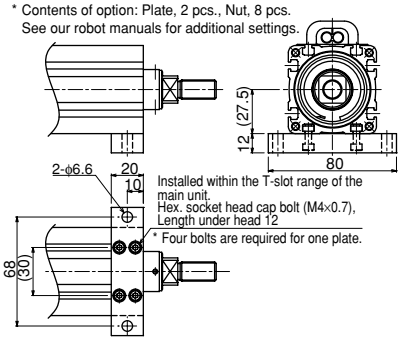

Option: Vertical installation plate (flange)

Hex. socket head cap bolt (M5×0.8), Length under head 14

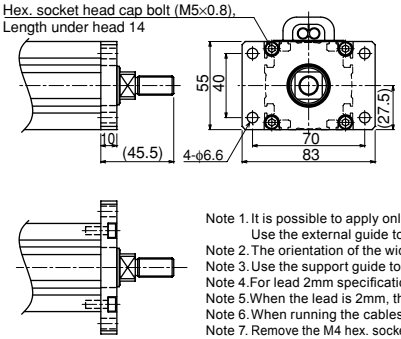

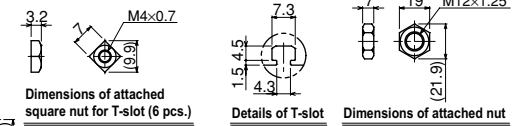

Effective stroke	50	100	150	200	250	300
L1	183	233	283	333	383	433
L	280.5	330.5	380.5	430.5	480.5	530.5
Weight (kg) Note 10	2.2	2.6	3.0	3.3	3.7	4.1

Note 1. It is possible to apply only the axial load.
Use the external guide together so that any radial load is not applied to the rod.
Note 2. The orientation of the width across flat part is undefined to the base surface.
Note 3. Use the support guide together to maintain the straightness.
Note 4. For lead 2mm specifications, the origin on the non-motor side cannot be set.
Note 5. When the lead is 2mm, this dimension is 27mm.
Note 6. When running the cables, secure cables so that any load is not applied to them.
Note 7. Remove the M4 hex. socket head cap set bolts and use them to secure the cables. (Effective screw thread depth 5)
Note 8. The cable's minimum bend radius is R30.
Note 9. Take great care as the outer case of the motor projects from the bottom of the main unit.
Note 10. Models with a brake will be 0.2kg heavier.
Note 11. Distance to mechanical stopper.

Controller	TS-S2 ▶ 490	TS-SH ▶ 490	TS-SD ▶ 500

SR05 Space-saving model (motor installed on right) R

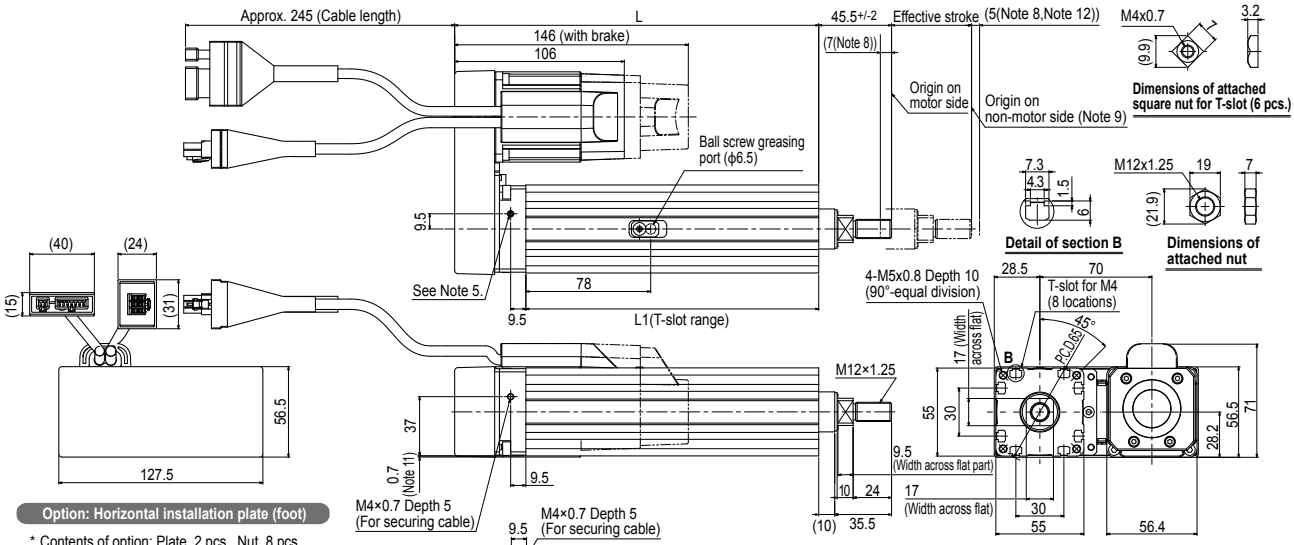

Option: Horizontal installation plate (foot)

* Contents of option: Plate, 2 pcs., Nut, 8 pcs.
See our robot manuals for additional settings.

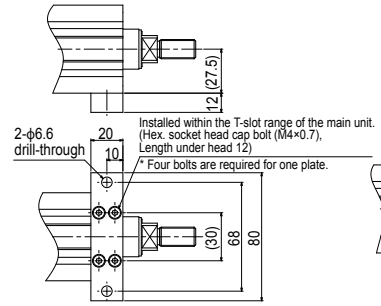

Option: Vertical installation plate (flange)

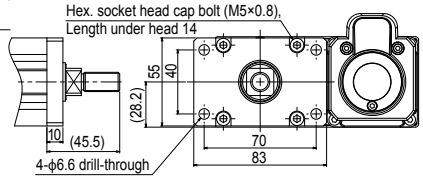

Effective stroke	50	100	150	200	250	300
L1	183	233	283	333	383	433
L	227.5	277.5	327.5	377.5	427.5	477.5
Weight (kg) Note 7	2.4	2.8	3.2	3.5	3.9	4.3

Note 1. It is possible to apply only the axial load.
Use the external guide together so that any radial load is not applied to the rod.
Note 2. The orientation of the width across flat part is undefined to the base surface.
Note 3. Use the support guide together to maintain the straightness.
Note 4. When running the cables, secure cables so that any load is not applied to them.
Note 5. Remove the M4 hex. socket head cap set bolts and use them to secure the cables. (Effective screw thread depth 5)
Note 6. The cable's minimum bend radius is R30.
Note 7. Models with a brake will be 0.2kg heavier.
Note 8. Distance to mechanical stopper.
Note 9. For lead 2mm specifications, the origin on the non-motor side cannot be set.
Note 10. This unit can be installed with the motor facing up (turned 90 degrees from the position in this drawing).
Note 11. Take great care as the outer case of the motor and cover belt projects from the bottom of the main unit.
Note 12. When the lead is 2mm, this dimension is 27mm.

SR05 Space-saving model (motor installed on left) L

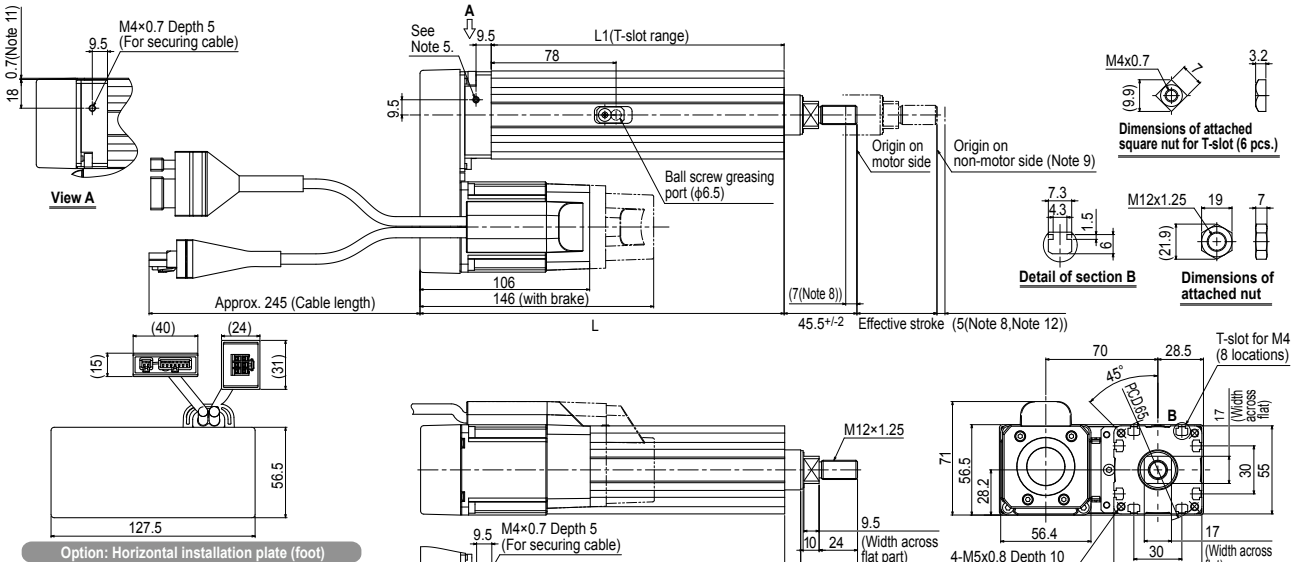

Option: Horizontal installation plate (foot)

* Contents of option: Plate, 2 pcs., Nut, 8 pcs.
See our robot manuals for additional settings.

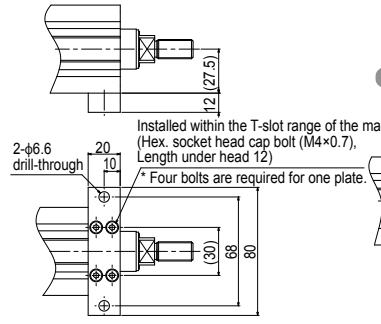

Option: Vertical installation plate (flange)

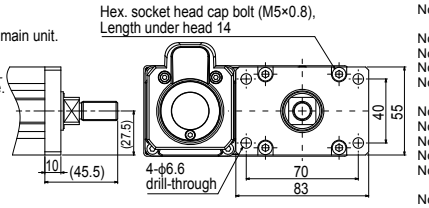

Effective stroke	50	100	150	200	250	300
L1	183	233	283	333	383	433
L	227.5	277.5	327.5	377.5	427.5	477.5
Weight (kg) Note 7	2.4	2.8	3.2	3.5	3.9	4.3

Note 1. It is possible to apply only the axial load.
Use the external guide together so that any radial load is not applied to the rod.
Note 2. The orientation of the width across flat part is undefined to the base surface.
Note 3. Use the support guide together to maintain the straightness.
Note 4. When running the cables, secure cables so that any load is not applied to them.
Note 5. Remove the M4 hex. socket head cap set bolts and use them to secure the cables. (Effective screw thread depth 5)
Note 6. The cable's minimum bend radius is R30.
Note 7. Models with a brake will be 0.2kg heavier.
Note 8. Distance to mechanical stopper.
Note 9. For lead 2mm specifications, the origin on the non-motor side cannot be set.
Note 10. This unit can be installed with the motor facing up (turned 90 degrees from the position in this drawing).
Note 11. Take great care as the outer case of the motor and cover belt projects from the bottom of the main unit.
Note 12. When the lead is 2 mm, this dimension is 27 mm.

SRD05 Rod type (With support guide)

CE compliance

Origin on the non-motor side is selectable: Lead 6, 12

Ordering method

SRD05 - [ ] - [ ] - [ ] - [ ] - [ ] - [ ] - [ ]

Model	Lead	Model	Brake	Origin position Note 2	Bracket plate	Stroke	Cable length Note 4
	12: 12mm 06: 6mm 02: 2mm	S: Straight model U: Space-saving model Note 1 (motor installed on top)	N: With no brake B: With brake	N: Standard Note 3 Z: Non-motor side	N: No plate H: With plate	50 to 300 (50mm pitch)	1K: 1m 3K: 3m 5K: 5m 10K: 10m

S2

Robot positioner	I/O
S2: TS-S2 Note 5	NP: NPN PN: PNP CC: CC-Link DN: DeviceNet™ EP: EtherNet/IP™ PT: PROFINET GW: No I/O board Note 6

SH

Robot positioner	I/O	Battery
SH: TS-SH	NP: NPN PN: PNP CC: CC-Link DN: DeviceNet™ EP: EtherNet/IP™ PT: PROFINET GW: No I/O board Note 6	B: With battery (Absolute) N: None (Incremental)

SD **1**

Robot driver	I/O cable
SD: TS-SD	1: 1m

Note 1. See P.129 for grease gun nozzles.
Note 2. When "2mm lead" is selected, the origin position cannot be changed (to non-motor side).
Note 3. If changing from the origin position at the time of purchase, the machine reference amount must be reset. For details, refer to the manual.
Note 4. The robot cable is flexible and resists bending.
Note 5. See P.498 for DIN rail mounting bracket.
Note 6. Select this selection when using the gateway function. For details, see P.60.

Basic specifications

Motor		56 □ Step motor	
Resolution (Pulse/rotation)		20480	
Repeatability (mm)		+/-0.02	
Deceleration mechanism		Ball screw ϕ12 (Class C10)	
Ball screw lead (mm)		12	6	2
Maximum speed Note 1 (mm/sec)		300	150	50
Maximum payload (kg)	Horizontal	50	55	60
	Vertical	8.5	18.5	28.5
Max. pressing force (N)		250	550	900
Stroke (mm)		50 to 300 (50pitch)	
Lost motion		0.1mm or less	
Rotating backlash (°)		+/-0.05	
Overall length (mm)	Horizontal	Stroke+276	
	Vertical	Stroke+316	
Maximum outside dimension of body cross-section (mm)		W56.4 × H71	
Cable length (m)		Standard: 1 / Option: 3, 5, 10	

Note 1. The maximum speed needs to be changed in accordance with the payload.
See the "Speed vs. payload" graph shown on the right.
For details, see P. 128.

Speed vs. payload

Horizontal

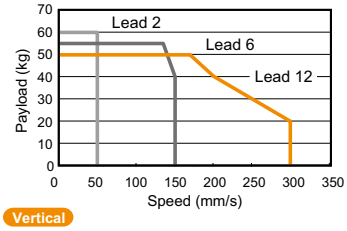

Vertical

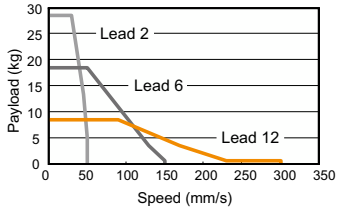

Running life

5000 km on models other than shown below.
Running life of only the model shown below becomes shorter than 5000 km depending on the payload, so check the running life curve.

Vertical Lead 2

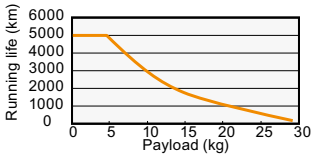

Note. See P.129 for running life distance to life time conversion example.

Controller

Controller	Operation method
TS-S2 TS-SH	I/O point trace / Remote command

Controller	Operation method
TS-SD	Pulse train control

SRD05 Straight model S

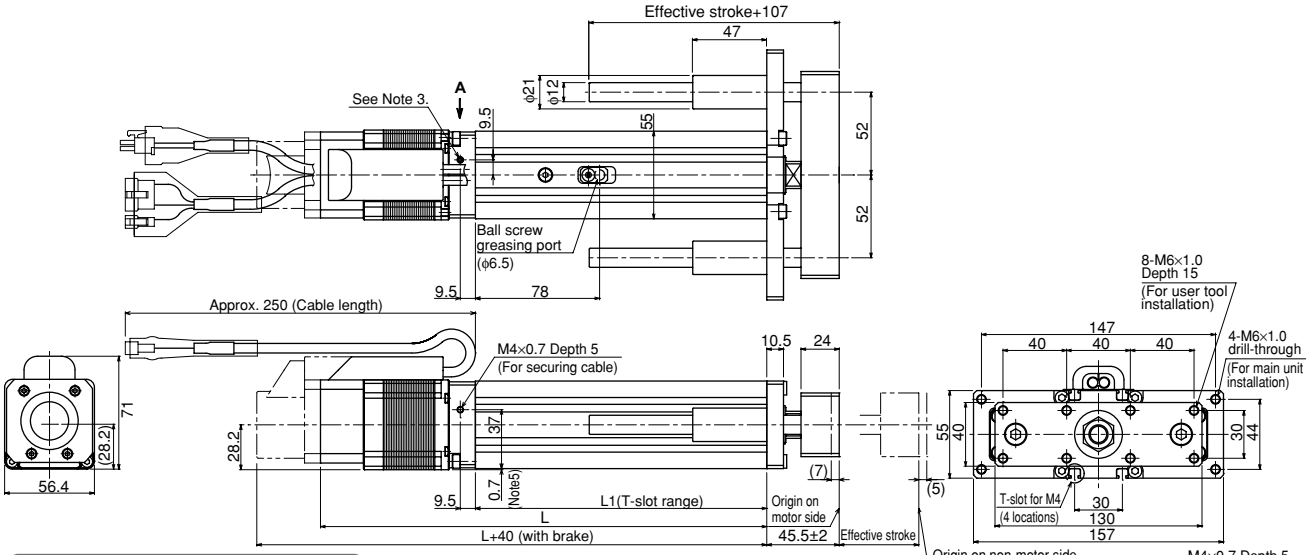

Option: Horizontal installation plate (foot)

* Contents of option: Plate, 2 pcs., Nut, 8 pcs.
See our robot manuals for additional settings.

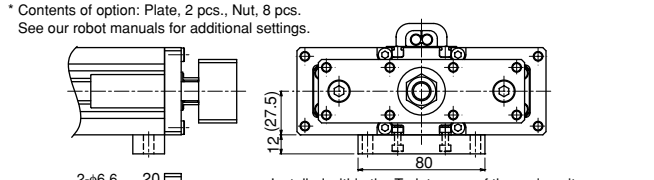

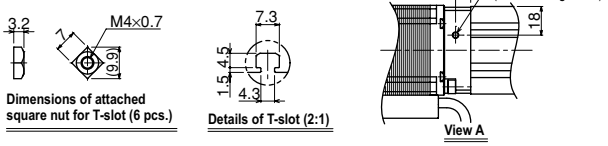

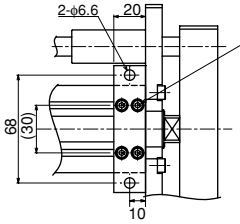

Installed within the T-slot range of the main unit.
Hex. socket head cap bolt (M4×0.7), Length under head 12
* Four bolts are required for one plate.

Effective stroke	50	100	150	200	250	300
L1	183	233	283	333	383	433
L	280.5	330.5	380.5	430.5	480.5	530.5
Weight (kg) Note 8	3.1	3.6	4.1	4.5	5.0	5.5

Note 1. It is possible to apply only the axial load.
Use the external guide together so that any radial load is not applied to the rod.
Note 2. For lead 2mm specifications, the origin on the non-motor side cannot be set.
Note 3. When the lead is 2mm, this dimension is 27mm.
Note 4. When running the cables, secure cables so that any load is not applied to them.
Note 5. Remove the M4 hex. socket head cap set bolts and use them to secure the cables. (Effective screw thread depth 5)
Note 6. The cable's minimum bend radius is R30.
Note 7. Take great care as the outer case of the motor projects from the bottom of the main unit.
Note 8. Models with a brake will be 0.2kg heavier.
Note 9. Distance to mechanical stopper.

Controller TS-S2 ▶ 490 TS-SH ▶ 490 TS-SD ▶ 500

SRD05 Space-saving model (motor installed on top) U

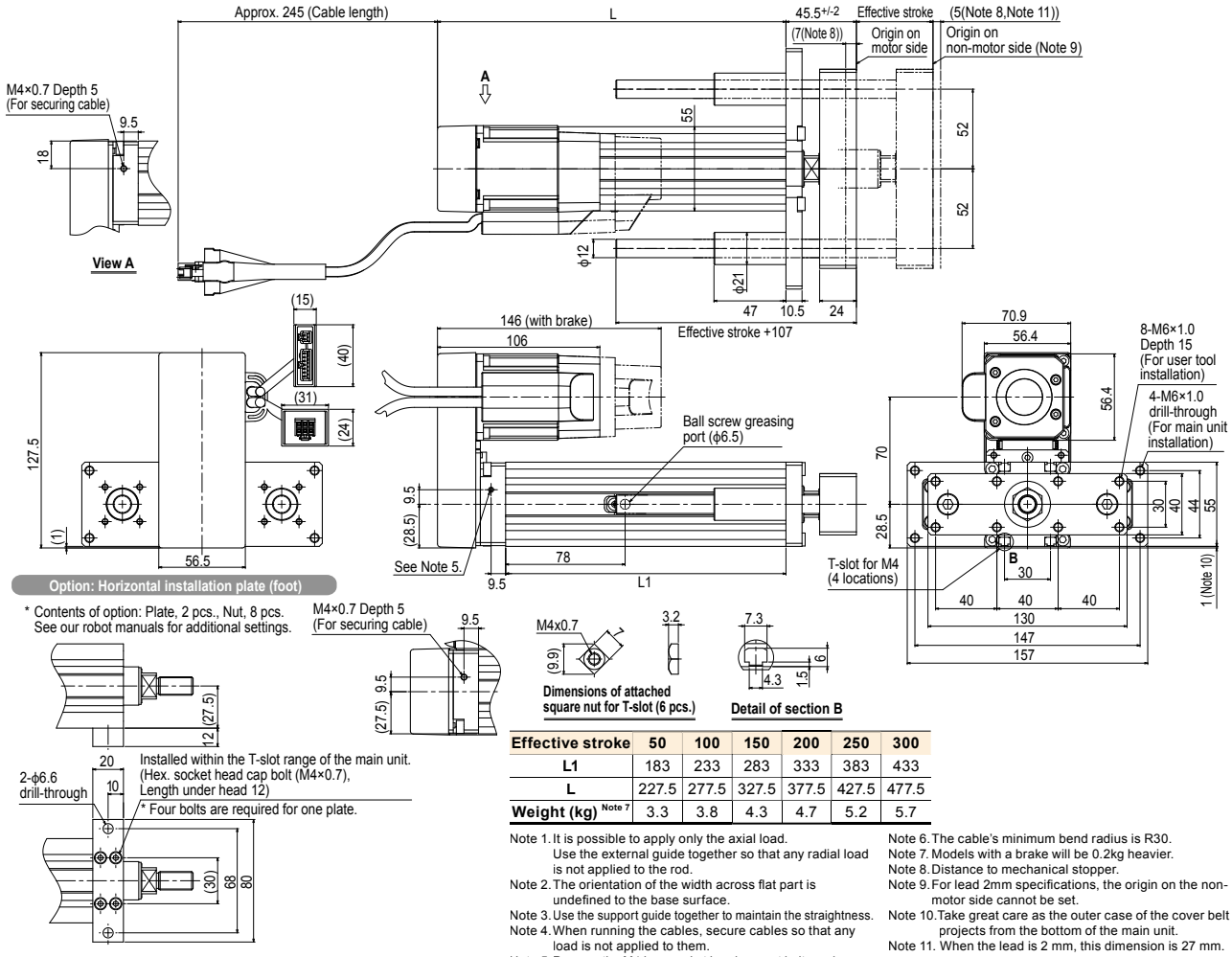

Effective stroke	50	100	150	200	250	300
L1	183	233	283	333	383	433
L	227.5	277.5	327.5	377.5	427.5	477.5
Weight (kg) Note 7	3.3	3.8	4.3	4.7	5.2	5.7

Note 1. It is possible to apply only the axial load. Use the external guide together so that any radial load is not applied to the rod.
Note 2. The orientation of the width across flat part is undefined to the base surface.
Note 3. Use the support guide together to maintain the straightness.
Note 4. When running the cables, secure cables so that any load is not applied to them.
Note 5. Remove the M4 hex. socket head cap set bolts and use them to secure the cables. (Effective screw thread depth 5)
Note 6. The cable's minimum bend radius is R30.
Note 7. Models with a brake will be 0.2kg heavier.
Note 8. Distance to mechanical stopper.
Note 9. For lead 2mm specifications, the origin on the non-motor side cannot be set.
Note 10. Take great care as the outer case of the cover belt projects from the bottom of the main unit.
Note 11. When the lead is 2 mm, this dimension is 27 mm.

STH04 Slide table type

- CE compliance
- Origin on the non-motor side is selectable

Ordering method

STH04 - [ ] - [ ] - [ ] - [ ] - [ ] - [ ] - [ ] - [ ] - [ ] - [ ]

Model	Lead	Model	Brake Note 1	Origin position	Bracket plate Note 3	Stroke	Cable length Note 4
	05: 5mm 10: 10mm	S: Straight model R: Space-saving model (motor installed on right) L: Space-saving model (motor installed on left)	N: With no brake B: With brake	N: Standard Note 2 Z: Non-motor side	N: No plate H: With plate	50: 50mm 100: 100mm	1K: 1m 3K: 3m 5K: 5m 10K: 10m

S2

Robot positioner	I/O
S2: TS-S2 Note 5	NP: NPN PN: PNP CC: CC-Link DN: DeviceNet™ EP: EtherNet/IP™ PT: PROFINET GW: No I/O board Note 7

SH

Robot positioner	I/O	Battery
SH: TS-SH	NP: NPN PN: PNP CC: CC-Link DN: DeviceNet™ EP: EtherNet/IP™ PT: PROFINET GW: No I/O board Note 7	B: With battery (Absolute) N: None (Incremental)

SD

Robot driver	I/O cable
SD: TS-SD Note 6	1: 1m

Note 1. For the space saving models (R and L), the specifications with brake are applicable to only 100mm strokes.
Note 2. If changing from the origin position at the time of purchase, the machine reference amount must be reset. For details, refer to the manual.
Note 3. Space-saving models (R and L) with the plate cannot be selected.
Note 4. The robot cable is flexible and resists bending.
Note 5. See P.498 for DIN rail mounting bracket.
Note 6. The robot with the brake cannot use the TS-SD.
Note 7. Select this selection when using the gateway function. For details, see P.60.

Basic specifications

Motor		28 □ Step motor	
Resolution (Pulse/rotation)		4096	
Repeatability Note 1 (mm)		+/-0.05	
Drive method	Straight	Slide screw	
	Space-saving	Slide screw + belt	
Ball screw lead (mm)		5	10
Maximum speed Note 2 (mm/sec)		200	400
Maximum payload (kg)	Horizontal	6	4
	Vertical	2	1
Max. pressing force (N)		55	30
Stroke (mm)		50/100	
Maximum outside dimension of body cross-section (mm)	Straight	W45 × H46	
	Space-saving	W74.5 × H51	
Cable length (m)		Standard: 1 / Option: 3, 5, 10	

Note 1. Positioning repeatability in one direction.
Note 2. The maximum speed needs to be changed in accordance with the payload.
See the "Speed vs. payload" graph shown on the right.
For details, see P. 128.

Allowable overhang Note

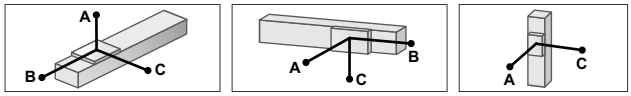

Horizontal installation (Unit: mm)

		A	B	C
Lead 10	2kg	1534	611	415
	3kg	949	374	255
	4kg	656	255	175
Lead 5	2kg	1534	611	415
	4kg	656	255	175
	6kg	364	137	95

Wall installation (Unit: mm)

		A	B	C
Lead 10	2kg	435	595	1504
	3kg	263	359	920
	4kg	177	241	629
Lead 5	2kg	435	595	1504
	4kg	177	241	629
	6kg	91	123	337

Vertical installation (Unit: mm)

		A	C
Lead 10	0.5kg	2000	2000
	0.75kg	1558	1558
	1kg	1165	1164
Lead 5	1kg	1165	1164
	1.5kg	771	771
	2kg	574	574

Note. Overhang at travelling service life of 3000km.
(Service life is calculated for 75mm stroke models.)

Static loading moment

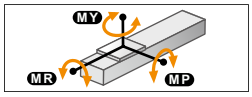

(Unit: N·m)

Stroke	MY	MP	MR
50mm	26	26	48
100mm	43	43	

Motor installation (Space-saving model)

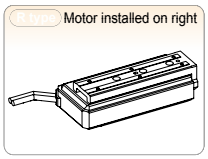

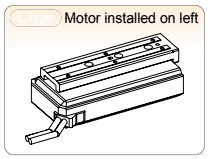

Speed vs. payload

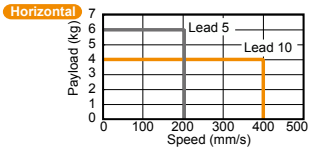

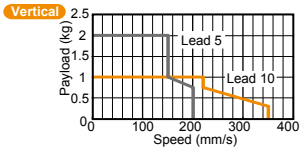

Controller

Controller	Operation method
TS-S2 TS-SH	I/O point trace / Remote command
TS-SD Note	Pulse train control

Note. The robot with the brake cannot use the TS-SD.

STH04 Straight model S

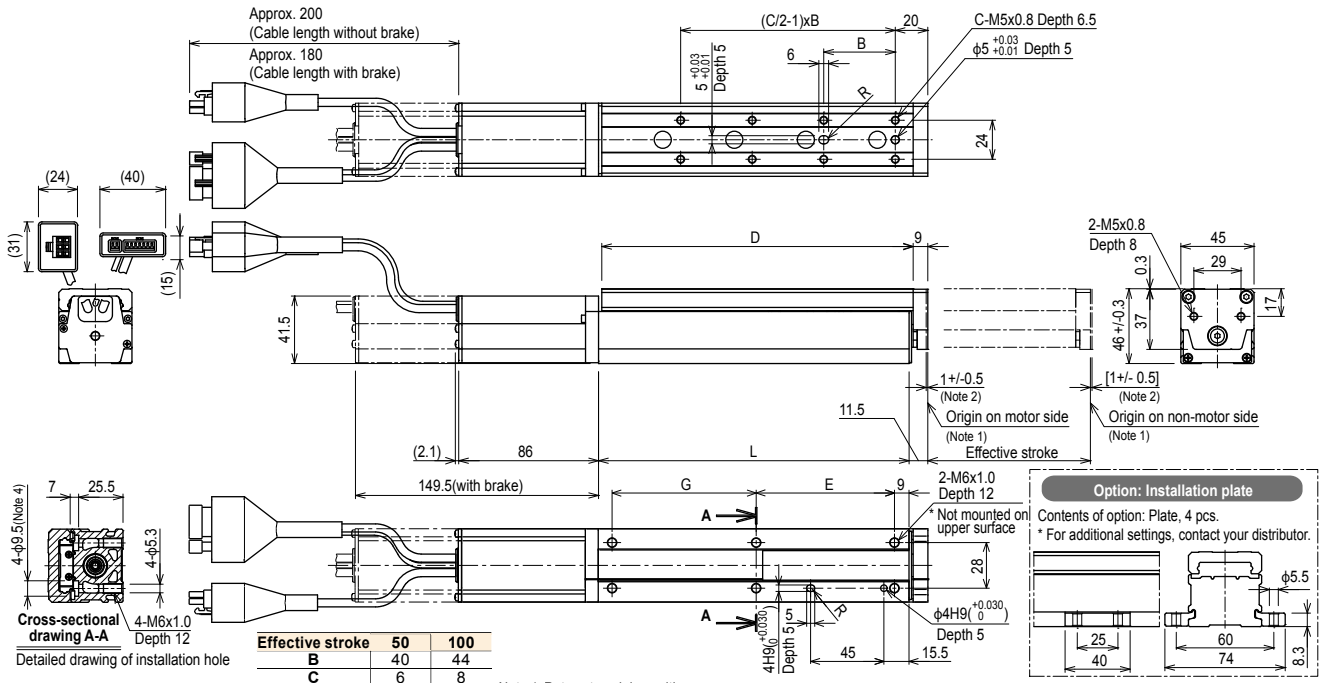

Effective stroke	50	100
B	40	44
C	6	8
D	116.5	191.5
E	65	85
G	39.5	88.5
L	122	191
Weight (kg) Note 6	1.25	1.7

Note 1. Return-to-origin position.
Note 2. Table movable range during return-to-origin operation. The values in [ ] show those when the return-to-origin direction is changed.
Note 3. The minimum bending radius of the motor cable is R30.
Note 4. When installing the mechanical main unit using the back facing holes, use the hex socket head cap M5 bolts.
Note 5. The installation hole positions of the main unit with the specifications with the brake are common to those shown above.
Note 6. Models with a brake will be 0.11kg heavier.

Controller	TS-S2 ▶ 490	TS-SH ▶ 490	TS-SD ▶ 500

STH04 Space-saving model (motor installed on right) R

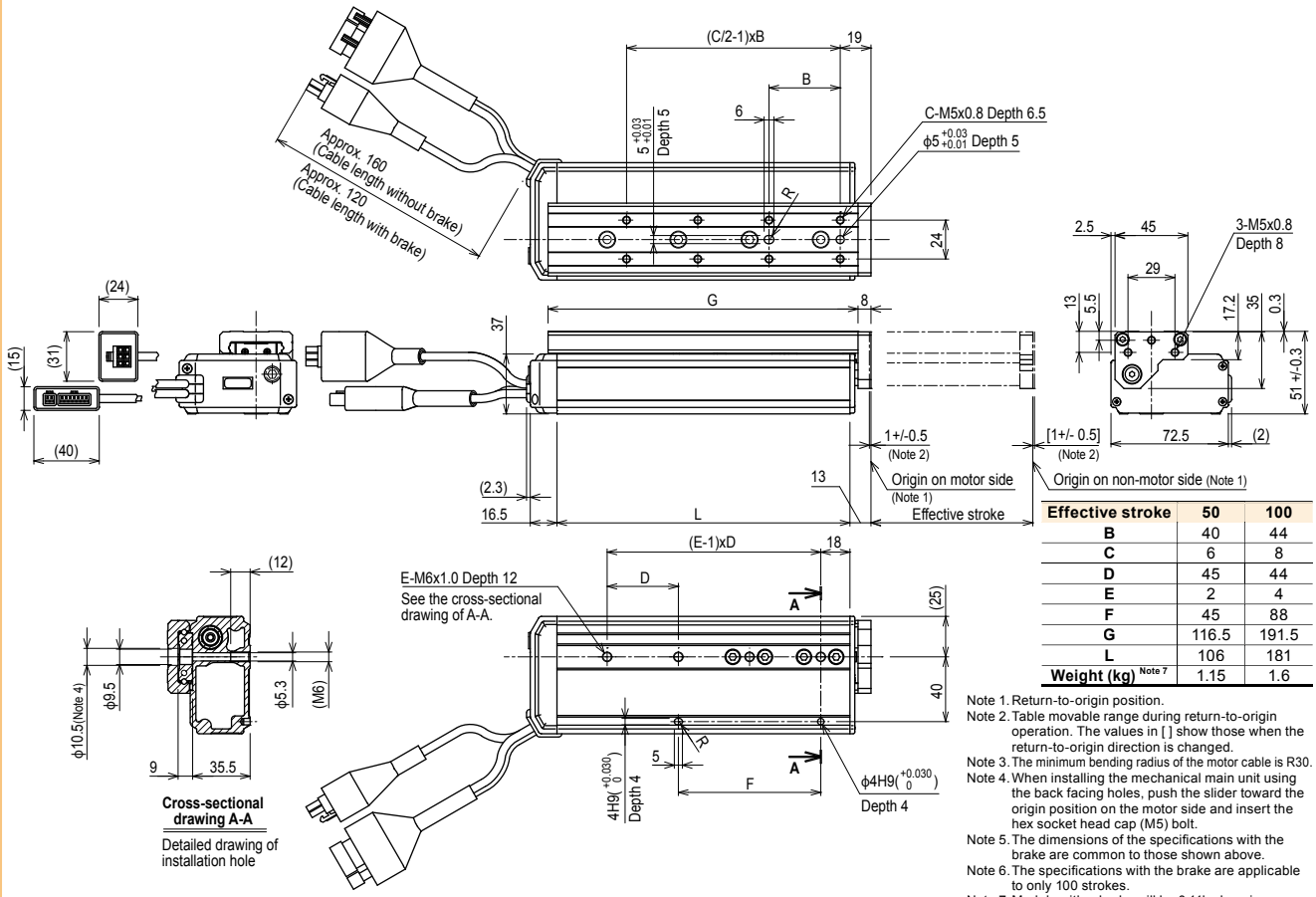

Effective stroke	50	100
B	40	44
C	6	8
D	45	44
E	2	4
F	45	88
G	116.5	191.5
L	106	181
Weight (kg) Note 7	1.15	1.6

Note 1. Return-to-origin position.
Note 2. Table movable range during return-to-origin operation. The values in [ ] show those when the return-to-origin direction is changed.
Note 3. The minimum bending radius of the motor cable is R30.
Note 4. When installing the mechanical main unit using the back facing holes, push the slider toward the origin position on the motor side and insert the hex socket head cap (M5) bolt.
Note 5. The dimensions of the specifications with the brake are common to those shown above.
Note 6. The specifications with the brake are applicable to only 100 strokes.
Note 7. Models with a brake will be 0.11kg heavier.

STH04 Space-saving model (motor installed on left) L

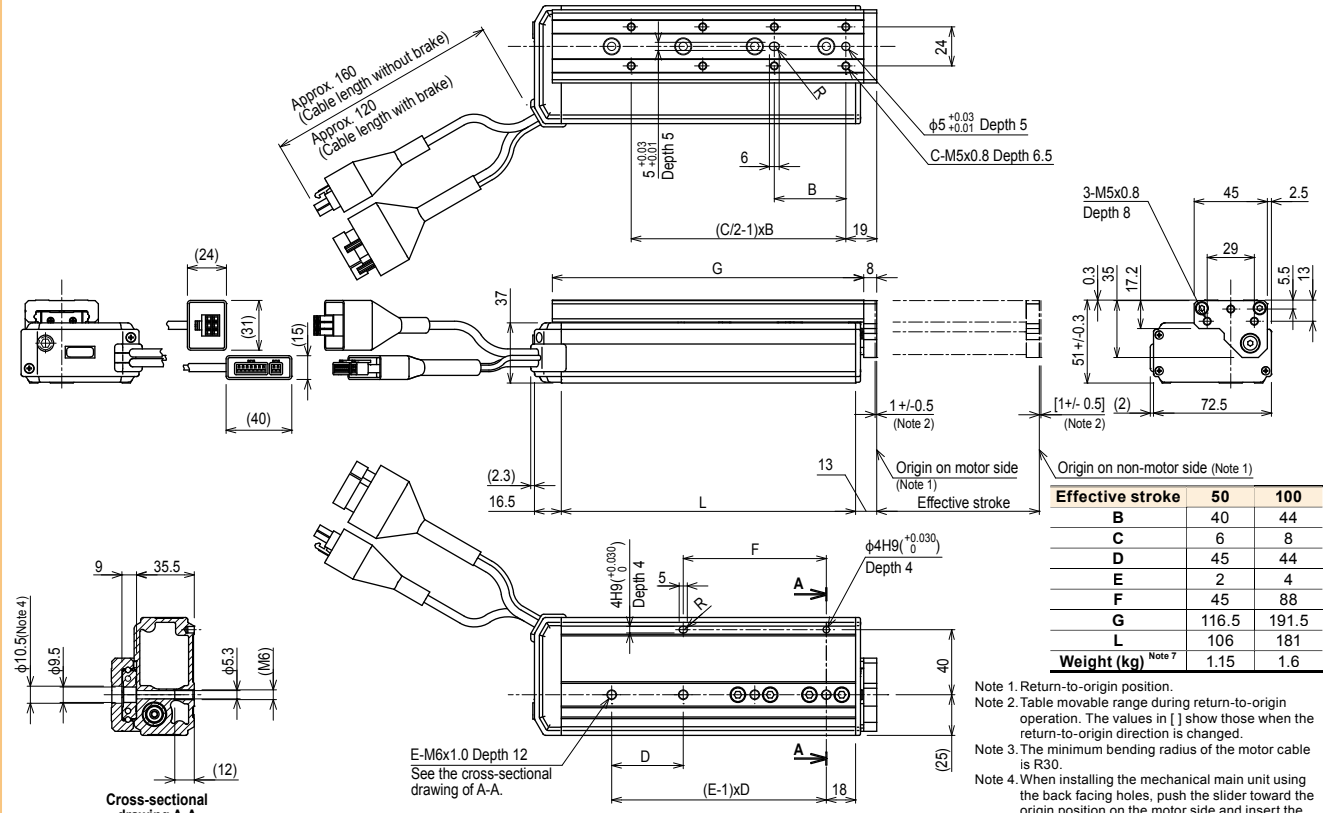

Effective stroke	50	100
B	40	44
C	6	8
D	45	44
E	2	4
F	45	88
G	116.5	191.5
L	106	181
Weight (kg) Note 7	1.15	1.6

Note 1. Return-to-origin position.
Note 2. Table movable range during return-to-origin operation. The values in [ ] show those when the return-to-origin direction is changed.
Note 3. The minimum bending radius of the motor cable is R30.
Note 4. When installing the mechanical main unit using the back facing holes, push the slider toward the origin position on the motor side and insert the hex socket head cap (M5) bolt.
Note 5. The dimensions of the specifications with the brake are common to those shown above.
Note 6. The specifications with the brake are applicable to only 100 strokes.
Note 7. Models with a brake will be 0.11kg heavier.

STH06 Slide table type

- CE compliance
- Origin on the non-motor side is selectable

Ordering method

STH06 – [ ] – [ ] – [ ] – [ ] – [ ] – [ ] – [ ]

Model	Lead	Model	Brake	Origin position	Bracket plate Note 2	Stroke	Cable length Note 3
	08: 8mm 16: 16mm	S: Straight model R: Space-saving model (motor installed on right) L: Space-saving model (motor installed on left)	N: With no brake B: With brake	N: Standard Note 1 Z: Non-motor side	N: No plate H: With plate	50: 50mm 100: 100mm 150: 150mm	1K: 1m 3K: 3m 5K: 5m 10K: 10m

S2

Robot positioner	I/O
S2: TS-S2 Note 4	NP: NPN PN: PNP CC: CC-Link DN: DeviceNet™ EP: EtherNet/IP™ PT: PROFINET GW: No I/O board Note 6

SH

Robot positioner	I/O	Battery
SH: TS-SH	NP: NPN PN: PNP CC: CC-Link DN: DeviceNet™ EP: EtherNet/IP™ PT: PROFINET GW: No I/O board Note 6	B: With battery (Absolute) N: None (Incremental)

SD

Robot driver	I/O cable
SD: TS-SD Note 5	1: 1m

Note 1. If changing from the origin position at the time of purchase, the machine reference amount must be reset. For details, refer to the manual.
Note 2. Space-saving models (R and L) with the plate cannot be selected.
Note 3. The robot cable is flexible and resists bending.
Note 4. See P.498 for DIN rail mounting bracket.
Note 5. The robot with the brake cannot use the TS-SD.
Note 6. Select this selection when using the gateway function. For details, see P.60.

Basic specifications

Motor		42 □ Step motor	
Resolution (Pulse/rotation)		20480	
Repeatability Note 1 (mm)		+/-0.05	
Drive method	Straight	Slide screw	
	Space-saving	Slide screw + belt	
Ball screw lead (mm)		8	16
Maximum speed Note 2 (mm/sec)		150	400
Maximum payload (kg)	Horizontal	9	6
	Vertical	4	2
Max. pressing force (N)		180	100
Stroke (mm)		50/100/150	
Maximum outside dimension of body cross-section (mm)	Straight	W61 × H65	
	Space-saving	W108 × H70	
Cable length (m)		Standard: 1 / Option: 3, 5, 10	

Note 1. Positioning repeatability in one direction.
Note 2. The maximum speed needs to be changed in accordance with the payload.
See the "Speed vs. payload" graph shown on the right.
For details, see P. 128.

Allowable overhang Note

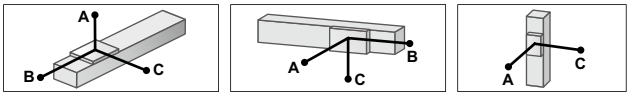

Horizontal installation (Unit: mm)

		A	B	C
Lead 16	2kg	3000	2123	1436
	4kg	2493	1001	680
	6kg	1571	627	428
Lead 8	3kg	3000	1375	932
	6kg	1571	627	428
	9kg	956	378	260

Wall installation (Unit: mm)

		A	B	C
Lead 16	2kg	1500	2091	3000
	4kg	710	975	2443
	6kg	440	603	1524
Lead 8	3kg	979	1347	3000
	6kg	440	603	1524
	9kg	260	355	912

Vertical installation (Unit: mm)

		A	C
Lead 16	1kg	3000	3000
	1.5kg	2458	2457
	2kg	1837	1837
Lead 8	2kg	1837	1837
	3kg	1217	1216
	4kg	907	906

Note. Overhang at travelling service life of 3000km.
(Service life is calculated for 100mm stroke models.)

Static loading moment

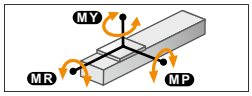

(Unit: N·m)

Stroke	MY	MP	MR
50mm	77	77	146
100mm	112	112	177
150mm	155	155	152

Motor installation (Space-saving model)

R type Motor installed on right

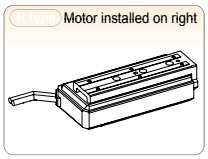

L type Motor installed on left

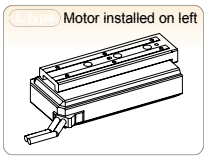

Speed vs. payload

Horizontal

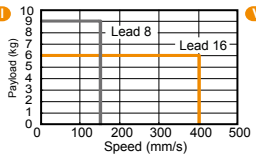

Vertical

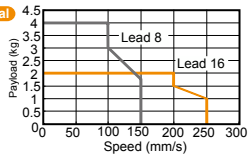

Controller

Controller	Operation method
TS-S2 TS-SH	I/O point trace / Remote command
TS-SD Note	Pulse train control

Note. The robot with the brake cannot use the TS-SD.

STH06 Straight model S

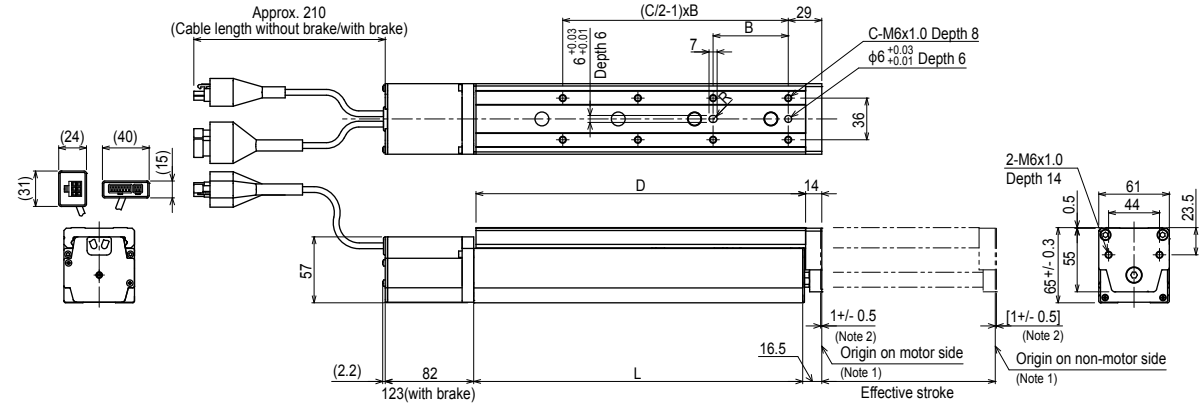

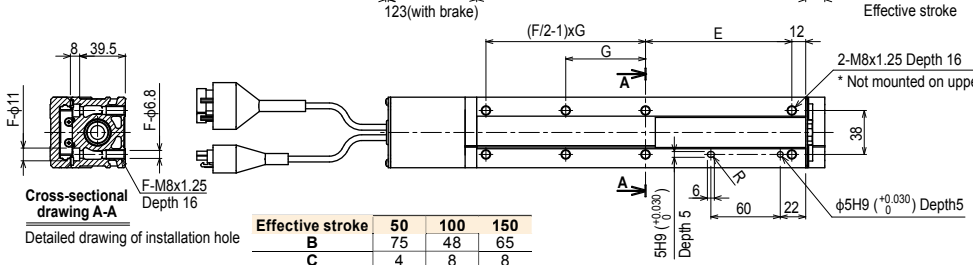

Detailed drawing of installation hole

Effective stroke	50	100	150
B	75	48	65
C	4	8	8
D	143	207	285
E	84	98.5	126.5
F	4	4	6
G	40.5	88	69
L	144.5	206.5	284.5
Weight (kg) Note 6	2.52	3.27	3.6

Note 1. Return-to-origin position.
Note 2. Table movable range during return-to-origin operation. The values in [ ] show those when the return-to-origin direction is changed.
Note 3. The minimum bending radius of the motor cable is R30.
Note 4. When installing the mechanical main unit using the back facing holes, use the hex socket head cap M6 bolts.

Option: Installation plate

Contents of option: Plate, 4 pcs.
* For additional settings, contact your distributor.

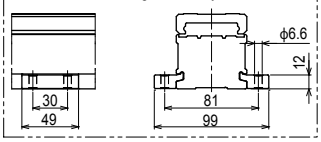

Note 5. The installation hole positions of the main unit with the specifications with the brake are common to those shown above.
Note 6. Models with a brake will be 0.34kg heavier.

Controller TS-S2 ▶ 490 TS-SH ▶ 490 TS-SD ▶ 500

STH06 Space-saving model (motor installed on right) R

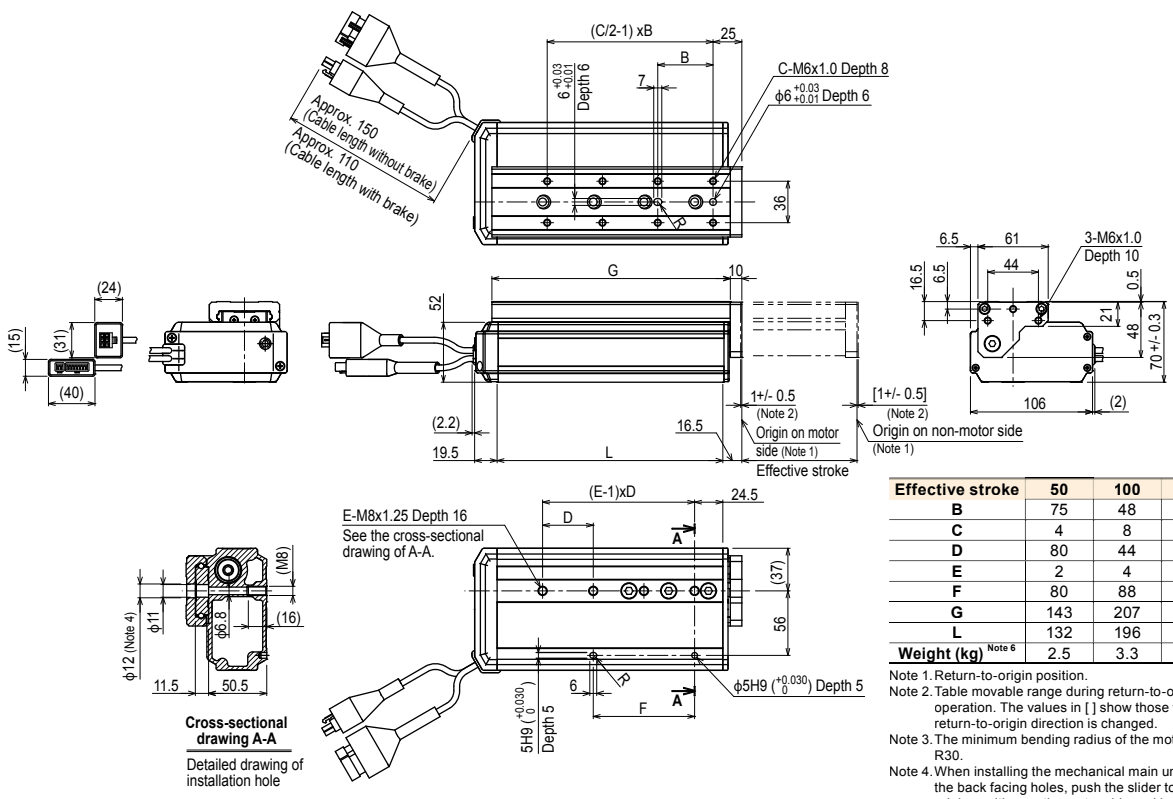

Effective stroke	50	100	150
B	75	48	65
C	4	8	8
D	80	44	66
E	2	4	4
F	80	88	132
G	143	207	285
L	132	196	274
Weight (kg) Note 6	2.5	3.3	4.26

Note 1. Return-to-origin position.
Note 2. Table movable range during return-to-origin operation. The values in [ ] show those when the return-to-origin direction is changed.
Note 3. The minimum bending radius of the motor cable is R30.
Note 4. When installing the mechanical main unit using the back facing holes, push the slider toward the origin position on the motor side and insert the hex socket head cap (M6) bolt.
Note 5. The dimensions of the specifications with the brake are common to those shown above.
Note 6. Models with a brake will be 0.34kg heavier.

STH06 Space-saving model (motor installed on left) L

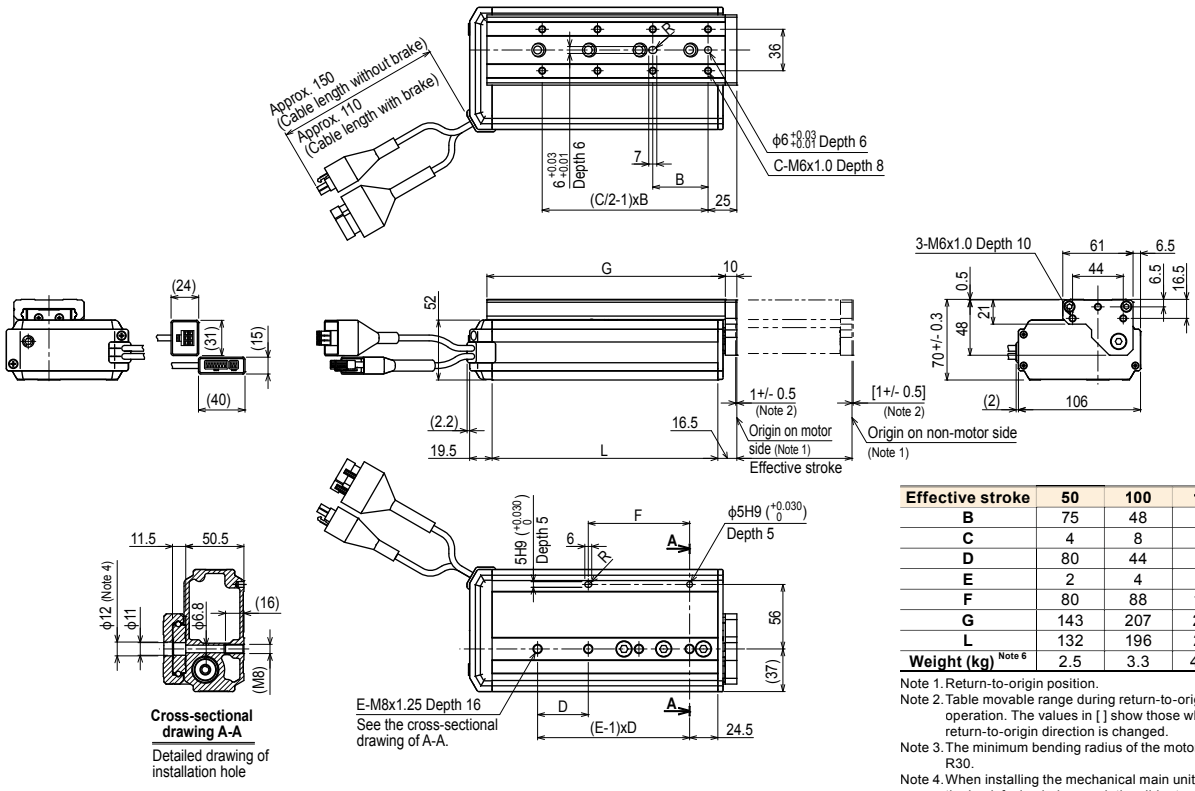

Effective stroke	50	100	150
B	75	48	65
C	4	8	8
D	80	44	66
E	2	4	4
F	80	88	132
G	143	207	285
L	132	196	274
Weight (kg) Note 6	2.5	3.3	4.26

Note 1. Return-to-origin position.
Note 2. Table movable range during return-to-origin operation. The values in [ ] show those when the return-to-origin direction is changed.
Note 3. The minimum bending radius of the motor cable is R30.
Note 4. When installing the mechanical main unit using the back facing holes, push the slider toward the origin position on the motor side and insert the hex socket head cap (M6) bolt.
Note 5. The dimensions of the specifications with the brake are common to those shown above.
Note 6. Models with a brake will be 0.34kg heavier.

RF02-N

Rotary type / Limit rotation specification

- CE compliance
- Rotation range : 310°

Ordering method

RF02 – **N** – [ ] – [ ] – **L** – [ ] – [ ] – [ ] – [ ] – [ ]

Model	Return-to-origin method	Bearing	Torque	Cable entry location	Rotation direction	Cable length Note 1
RF02	N: Stroke end (Limit rotation)	N: Standard H: High rigidity	N: Standard torque H: High torque	L: From the left	N: CCW Z: CW	1K: 1m 3K: 3m 5K: 5m 10K: 10m

S2

Robot positioner	I/O
S2: TS-S2 Note2	NP: NPN PN: PNP CC: CC-Link DN: DeviceNet™ EP: EtherNet/IP™ PT: PROFINET GW: No I/O board Note 3

SH

Robot positioner	I/O	Battery
SH: TS-SH	NP: NPN PN: PNP CC: CC-Link DN: DeviceNet™ EP: EtherNet/IP™ PT: PROFINET GW: No I/O board Note 3	B: With battery (Absolute) N: None (Incremental)

SD

Robot driver	I/O cable
SD: TS-SD	1: 1m

Note 1. The robot cable is flexible and resists bending.
Note 2. See P.498 for DIN rail mounting bracket.
Note 3. Select this selection when using the gateway function. For details, see P.60.

Basic specifications

Motor	20 □ Step motor	
Resolution (Pulse/rotation)	4096	
Repeatability Note 1 **(°)**	+/-0.05	
Drive method	Special warm gear + belt	
Torque type	Standard	High torque
Maximum speed Note 2 **(°/sec)**	420	280
Rotating torque (N•m)	0.22	0.32
Max. pushing torque (N•m)	0.11	0.16
Backlash (°)	+/-0.5	
Max. moment of inertia Note 3 **(kg•m²)**	0.0018	0.004
Cable length (m)	Standard: 1 / Option: 3, 5, 10	
Rotation range (°)	310	

Note 1. Positioning repeatability in one direction.
Note 2. The maximum speed may vary depending on the moment of inertia. Check the maximum speed while referring to the "Moment of inertia vs. Acceleration/deceleration" graph and the "Effective torque vs. speed" graph (reference).
Note 3. For moment of inertia and effective torque details, see P.604.

Moment of inertia Acceleration/deceleration

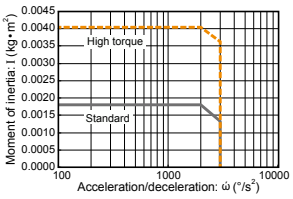

Effective torque vs. speed

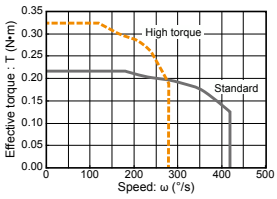

Allowable load

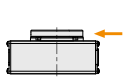

Allowable radial load (N)	
Standard model	High rigidity model
78	86

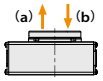

Allowable thrust load (N)			
(a)		(b)	
Standard model	High rigidity model	Standard model	High rigidity model
74		78	107

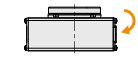

Allowable moment (N•m)	
Standard model	High rigidity model
2.4	2.9

Note. When purchasing the product, set the controller acceleration while carefully checking the "Moment of inertia vs. Acceleration/Deceleration" and "Effective torque vs. Speed" graphs.
For details, please refer to the TRANSERVO Series User's Manual.

Controller

Controller	Operation method
TS-S2 TS-SH	I/O point trace / Remote command
TS-SD	Pulse train control

RF02-NN Limit rotation specification – Standard model

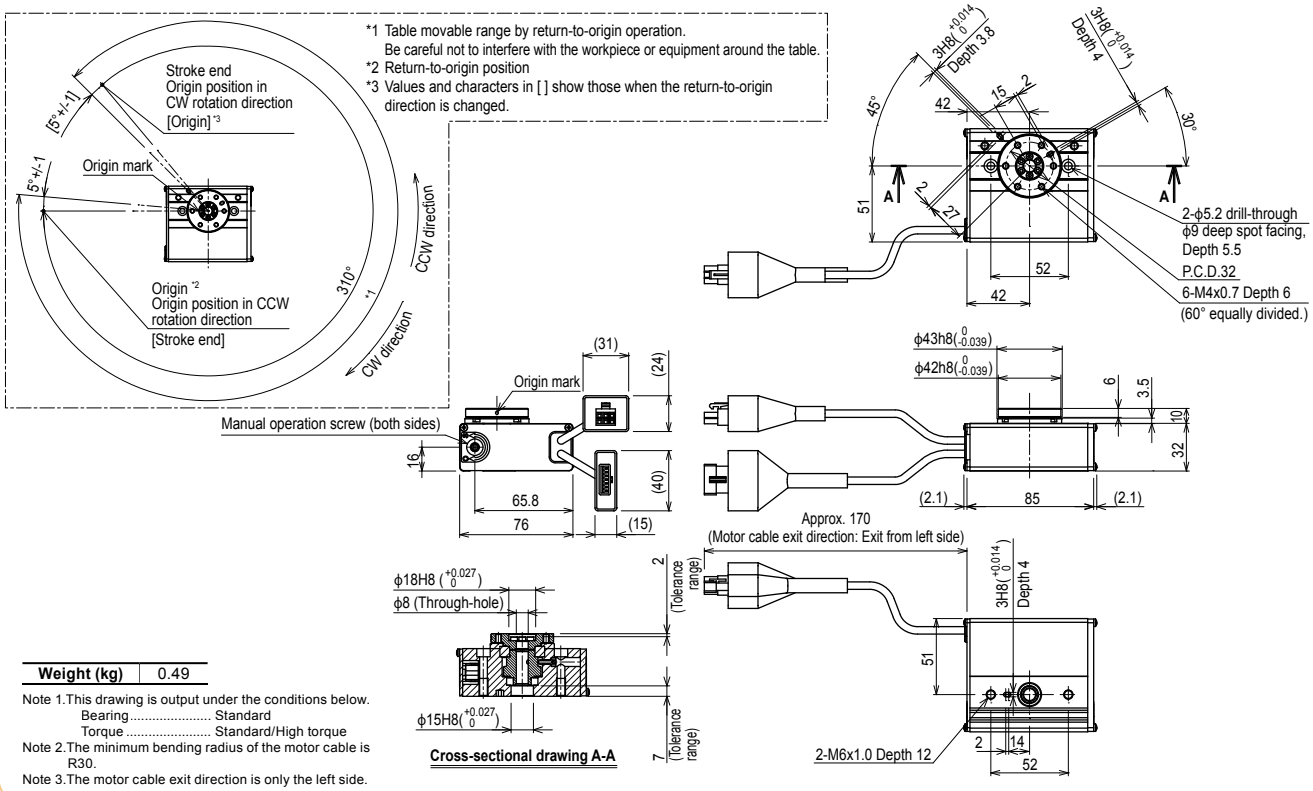

Weight (kg)	0.49

Note 1.This drawing is output under the conditions below.
Bearing ..... Standard
Torque ..... Standard/High torque
Note 2.The minimum bending radius of the motor cable is R30.
Note 3.The motor cable exit direction is only the left side.

Controller TS-S2 ▶ 490 TS-SH ▶ 490 TS-SD ▶ 500

RF02-NH Limit rotation specification – High rigidity model

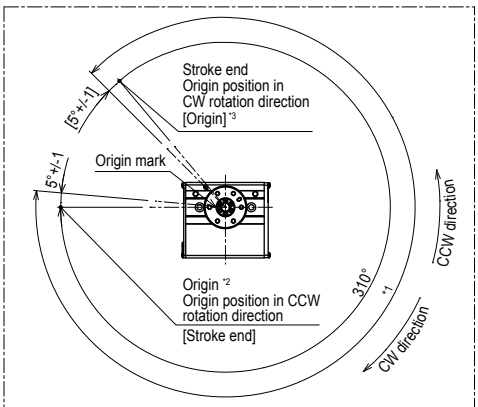

*1 Table movable range by return-to-origin operation.
Be careful not to interfere with the workpiece or equipment around the table.
*2 Return-to-origin position
*3 Values and characters in [ ] show those when the return-to-origin direction is changed.

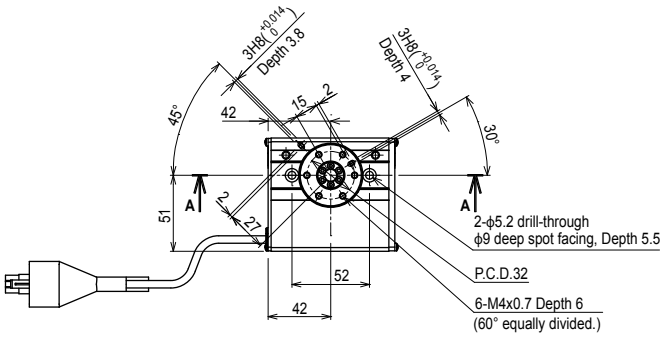

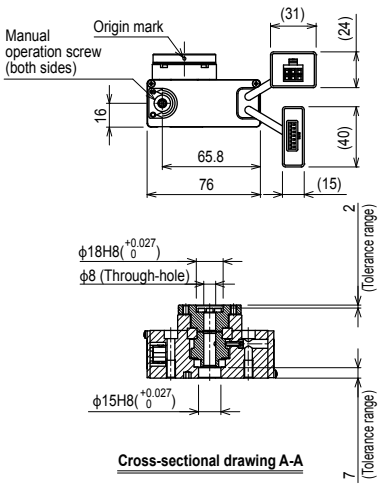

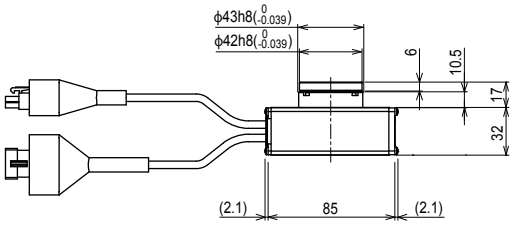

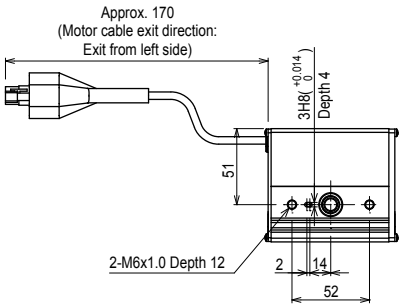

Weight (kg)	0.52

Note 1.This drawing is output under the conditions below.
Bearing..... High rigidity
Torque ..... Standard/High torque
Note 2.The minimum bending radius of the motor cable is R30.
Note 3.The motor cable exit direction is only the left side.

RF02-S

Rotary type / Sensor specification

- CE compliance
- Limitless rotation

Ordering method

RF02 – [ ] – [ ] – [ ] – [ ] – [ ] – [ ] – [ ] – [ ] – [ ]

Model	Return-to-origin method	Bearing	Torque	Cable entry location	Rotation direction	Cable length Note 1
RF02	S: Sensor (Limitless rotation)	N: Standard H: High rigidity	N: Standard torque H: High torque	L: From the left	N: CCW Z: CW	1K: 1m 3K: 3m 5K: 5m 10K: 10m

S2

Robot positioner	I/O
S2: TS-S2 Note2	NP: NPN PN: PNP CC: CC-Link DN: DeviceNet™ EP: EtherNet/IP™ PT: PROFINET GW: No I/O board Note 3

SH

Robot positioner	I/O	Battery
SH: TS-SH	NP: NPN PN: PNP CC: CC-Link DN: DeviceNet™ EP: EtherNet/IP™ PT: PROFINET GW: No I/O board Note 3	B: With battery (Absolute) N: None (Incremental)

Note 1. The robot cable is flexible and resists bending.
Note 2. See P.498 for DIN rail mounting bracket.
Note 3. Select this selection when using the gateway function. For details, see P.60.

Basic specifications

Motor	20 □ Step motor	
Resolution (Pulse/rotation)	4096	
Repeatability Note 1 **(°)**	+/-0.05	
Drive method	Special warm gear + belt	
Torque type	Standard	High torque
Maximum speed Note 2 **(°/sec)**	420	280
Rotating torque (N•m)	0.22	0.32
Max. pushing torque (N•m)	0.11	0.16
Backlash (°)	+/-0.5	
Max. moment of inertia Note 3 **(kg•m²)**	0.0018	0.004
Cable length (m)	Standard: 1 / Option: 3, 5, 10	
Rotation range (°)	360	

Note 1. Positioning repeatability in one direction.
Note 2. The maximum speed may vary depending on the moment of inertia. Check the maximum speed while referring to the "Moment of inertia vs. Acceleration/deceleration" graph and the "Effective torque vs. speed" graph (reference).
Note 3. For moment of inertia and effective torque details, see P.604.

Moment of inertia Acceleration/deceleration

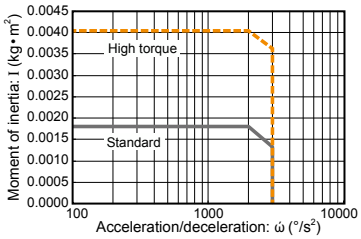

Effective torque vs. speed

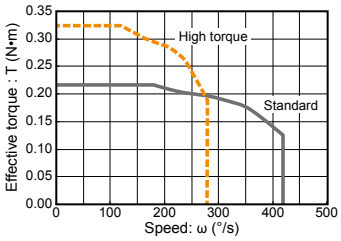

Allowable load

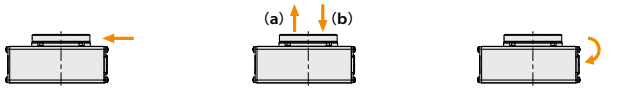

Allowable radial load (N)		Allowable thrust load (N) (a)		Allowable thrust load (N) (b)		Allowable moment (N•m)	
Standard model	High rigidity model	Standard model	High rigidity model	Standard model	High rigidity model	Standard model	High rigidity model
78	86	74		78	107	2.4	2.9

Note. When purchasing the product, set the controller acceleration while carefully checking the "Moment of inertia vs. Acceleration/Deceleration" and "Effective torque vs. Speed" graphs.
For details, please refer to the TRANSERVO Series User's Manual.

Controller

Controller	Operation method
TS-S2S	I/O point trace /
TS-SHS	Remote command

RF02-SN Sensor specification – Standard model

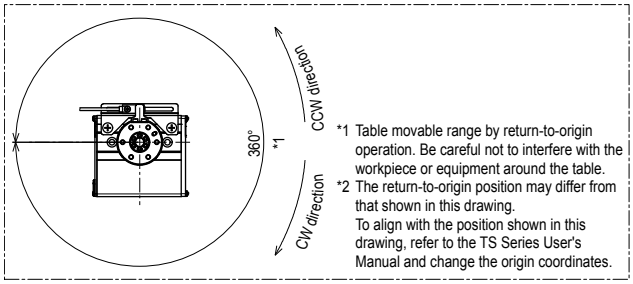

*1 Table movable range by return-to-origin operation. Be careful not to interfere with the workpiece or equipment around the table.
*2 The return-to-origin position may differ from that shown in this drawing.
To align with the position shown in this drawing, refer to the TS Series User's Manual and change the origin coordinates.

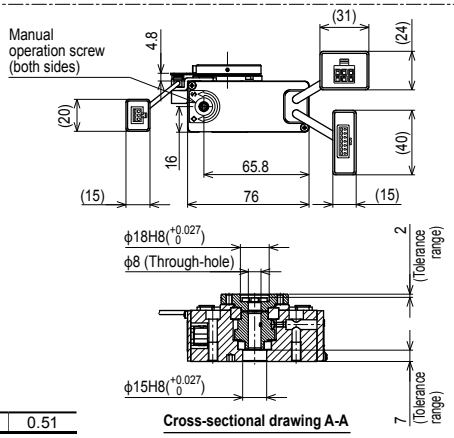

Cross-sectional drawing A-A

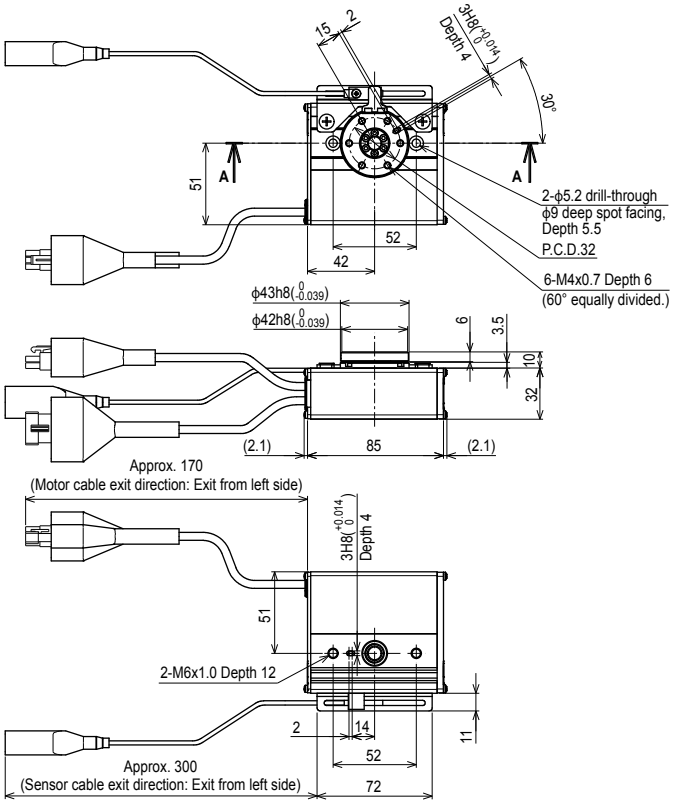

Weight (kg)	0.51

Note 1. This drawing is output under the conditions below.
Bearing..... Standard
Torque..... Standard/High torque
Note 2. The minimum bending radii of the motor cable and sensor cable are R30.
Note 3. The motor cable exit direction is only the left side.

Controller TS-S2 ▶ 490 TS-SH ▶ 490

RF02-SH Sensor specification – High rigidity model

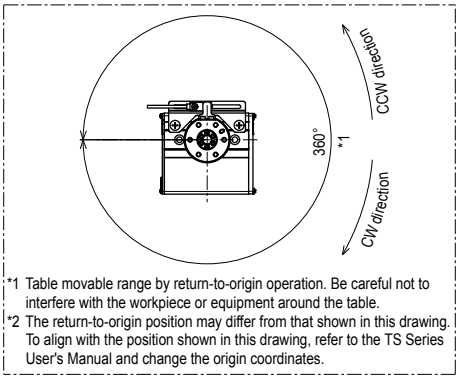

*1 Table movable range by return-to-origin operation. Be careful not to interfere with the workpiece or equipment around the table.
*2 The return-to-origin position may differ from that shown in this drawing. To align with the position shown in this drawing, refer to the TS Series User's Manual and change the origin coordinates.

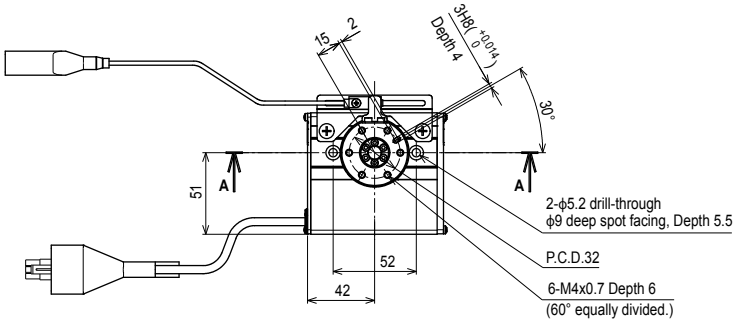

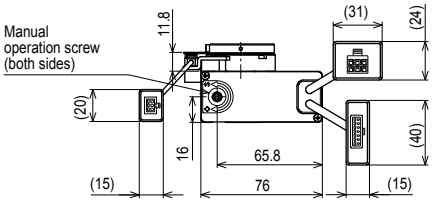

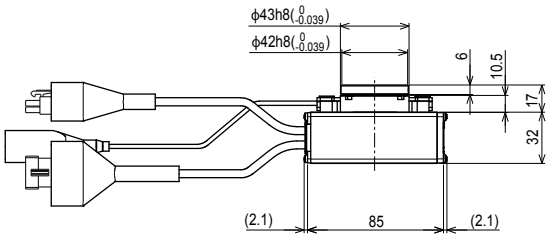

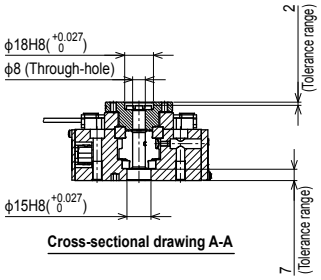

Cross-sectional drawing A-A

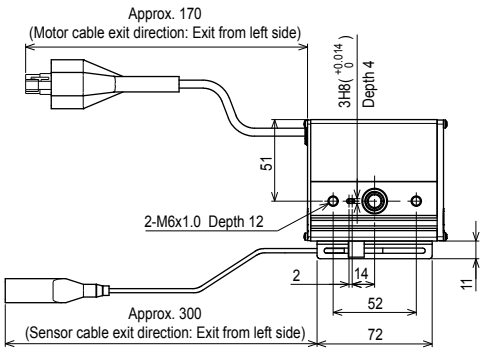

Weight (kg)	0.55

Note 1. This drawing is output under the conditions below.
Bearing..... High rigidity
Torque ..... Standard/High torque
Note 2. The minimum bending radii of the motor cable and sensor cable are R30.
Note 3. The motor cable exit direction is only the left side.

RF03-N

Rotary type / Limit rotation specification

- CE compliance
- Rotation range : 320°

Ordering method

RF03 – **N** – [ ] – [ ] – [ ] – [ ] – [ ] – [ ] – [ ] – [ ]

Model	Return-to-origin method	Bearing	Torque	Cable entry location	Rotation direction	Cable length Note 1
RF03	N: Stroke end (Limit rotation)	N: Standard H: High rigidity	N: Standard torque H: High torque	R:From the right L: From the left	N: CCW Z: CW	1K: 1m 3K: 3m 5K: 5m 10K: 10m

S2

Robot positioner	I/O
S2: TS-S2 Note2	NP: NPN PN: PNP CC: CC-Link DN: DeviceNet™ EP: EtherNet/IP™ PT: PROFINET GW: No I/O board Note 3

SH

Robot positioner	I/O	Battery
SH: TS-SH	NP: NPN PN: PNP CC: CC-Link DN: DeviceNet™ EP: EtherNet/IP™ PT: PROFINET GW: No I/O board Note 3	B: With battery (Absolute) N: None (Incremental)

SD – **1**

Robot driver	I/O cable
SD: TS-SD	1: 1m

Note 1. The robot cable is flexible and resists bending.
Note 2. See P.498 for DIN rail mounting bracket.
Note 3. Select this selection when using the gateway function. For details, see P.60.

Basic specifications

Motor	28 □ Step motor	
Resolution (Pulse/rotation)	4096	
Repeatability Note 1 **(°)**	+/-0.05	
Drive method	Special warm gear + belt	
Torque type	Standard	High torque
Maximum speed Note 2 **(°/sec)**	420	280
Rotating torque (N•m)	0.8	1.2
Max. pushing torque (N•m)	0.4	0.6
Backlash (°)	+/-0.5	
Max. moment of inertia Note 3 **(kg•m²)**	0.012	0.027
Cable length (m)	Standard: 1 / Option: 3, 5, 10	
Rotation range (°)	320	

Note 1. Positioning repeatability in one direction.
Note 2. The maximum speed may vary depending on the moment of inertia. Check the maximum speed while referring to the "Moment of inertia vs. Acceleration/deceleration" graph and the "Effective torque vs. speed" graph (reference).
Note 3. For moment of inertia and effective torque details, see P.604.

Moment of inertia Acceleration/deceleration

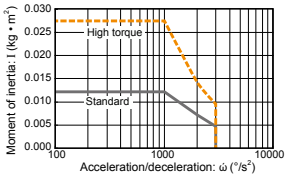

Effective torque vs. speed

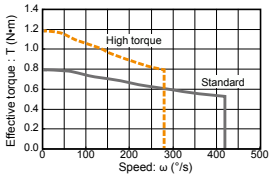

Allowable load

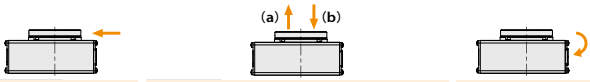

Allowable radial load (N)		Allowable thrust load (N) (a)		Allowable thrust load (N) (b)		Allowable moment (N•m)	
Standard model	High rigidity model	Standard model	High rigidity model	Standard model	High rigidity model	Standard model	High rigidity model
196	233	197		363	398	5.3	6.4

Note. When purchasing the product, set the controller acceleration while carefully checking the "Moment of inertia vs. Acceleration/Deceleration" and "Effective torque vs. Speed" graphs.
For details, please refer to the TRANSERVO Series User's Manual.

Controller

Controller	Operation method
TS-S2 TS-SH	I/O point trace / Remote command
TS-SD	Pulse train control

RF03-NN Limit rotation specification – Standard model

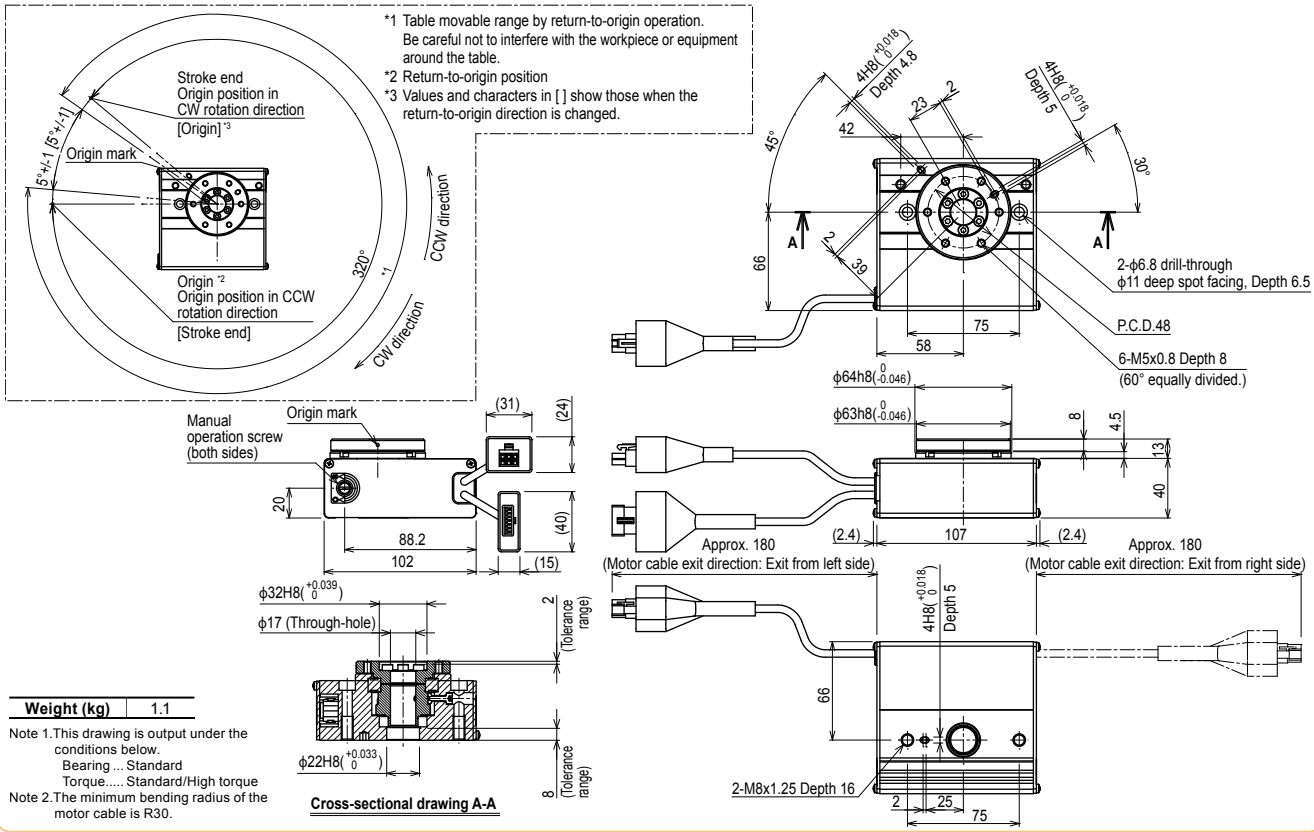

Cross-sectional drawing A-A

Weight (kg)	1.1

Note 1.This drawing is output under the conditions below.
Bearing ... Standard
Torque..... Standard/High torque
Note 2.The minimum bending radius of the motor cable is R30.

Controller TS-S2 ▶ 490 TS-SH ▶ 490 TS-SD ▶ 500

RF03-NH Limit rotation specification – High rigidity model

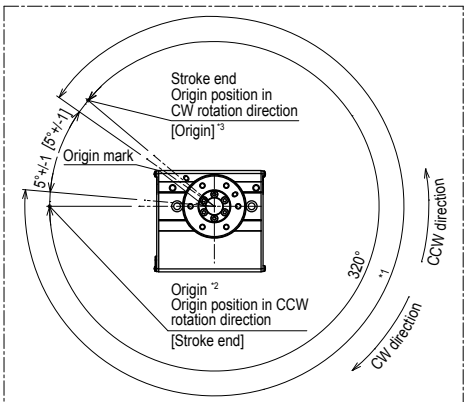

*1 Table movable range by return-to-origin operation.
Be careful not to interfere with the workpiece or equipment around the table.
*2 Return-to-origin position
*3 Values and characters in [ ] show those when the return-to-origin direction is changed.

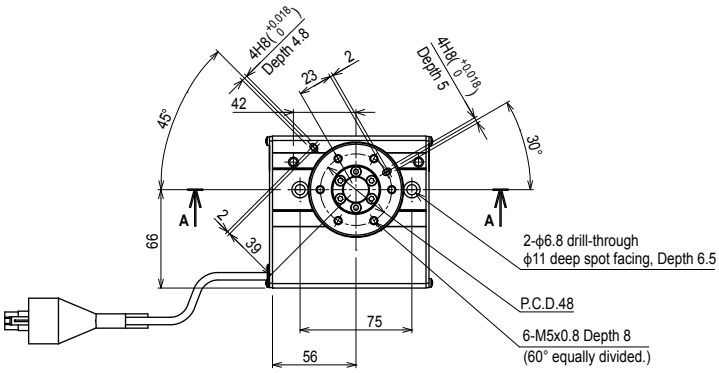

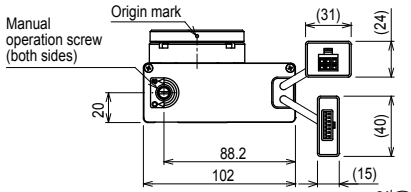

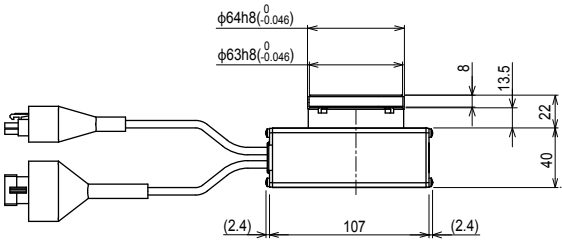

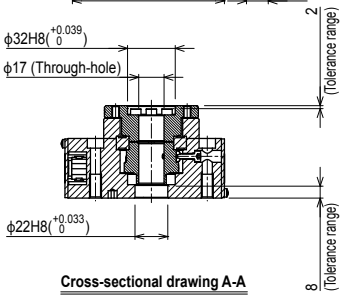

Cross-sectional drawing A-A

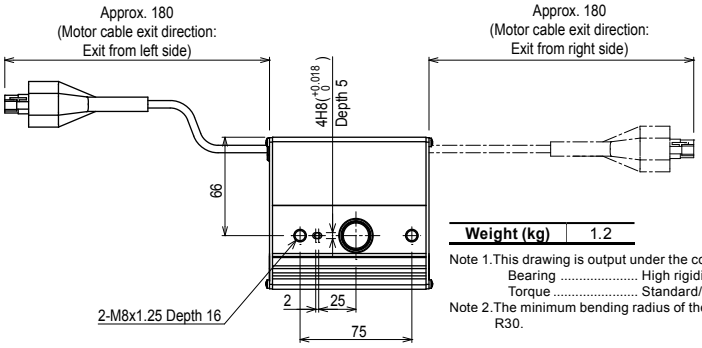

Weight (kg)	1.2

Note 1.This drawing is output under the conditions below.
Bearing ..... High rigidity
Torque ..... Standard/High torque
Note 2.The minimum bending radius of the motor cable is R30.

RF03-S

Rotary type / Sensor specification

- CE compliance
- Limitless rotation

Ordering method

RF03 – **S** – [ ] – [ ] – [ ] – [ ] – [ ] – [ ]

Model	Return-to-origin method	Bearing	Torque	Cable entry location	Rotation direction	Cable length Note 1
RF03	S: Sensor (Limitless rotation)	N: Standard H: High rigidity	N: Standard torque H: High torque	R: From the right L: From the left	N: CCW Z: CW	1K: 1m 3K: 3m 5K: 5m 10K: 10m

S2

Robot positioner	I/O
S2: TS-S2 Note2	NP: NPN PN: PNP CC: CC-Link DN: DeviceNet™ EP: EtherNet/IP™ PT: PROFINET GW: No I/O board Note3

SH

Robot positioner	I/O	Battery
SH: TS-SH	NP: NPN PN: PNP CC: CC-Link DN: DeviceNet™ EP: EtherNet/IP™ PT: PROFINET GW: No I/O board Note3	B: With battery (Absolute) N: None (Incremental)

Note 1. The robot cable is flexible and resists bending.
Note 2. See P.498 for DIN rail mounting bracket.
Note 3. Select this selection when using the gateway function. For details, see P.60.

Basic specifications

Motor	28 □ Step motor	
Resolution (Pulse/rotation)	4096	
Repeatability Note 1 **(°)**	+/-0.05	
Drive method	Special warm gear + belt	
Torque type	Standard	High torque
Maximum speed Note 2 **(°/sec)**	420	280
Rotating torque (N•m)	0.8	1.2
Max. pushing torque (N•m)	0.4	0.6
Backlash (°)	+/-0.5	
Max. moment of inertia Note 3 **(kg•m²)**	0.012	0.027
Cable length (m)	Standard: 1 / Option: 3, 5, 10	
Rotation range (°)	360	

Note 1. Positioning repeatability in one direction.
Note 2. The maximum speed may vary depending on the moment of inertia. Check the maximum speed while referring to the "Moment of inertia vs. Acceleration/deceleration" graph and the "Effective torque vs. speed" graph (reference).
Note 3. For moment of inertia and effective torque details, see P.604.

Moment of inertia Acceleration/deceleration

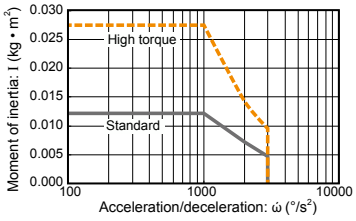

Effective torque vs. speed

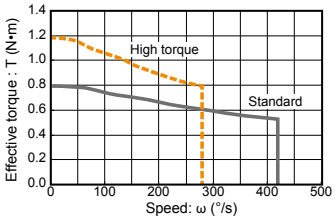

Allowable load

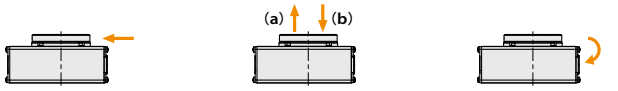

Allowable radial load (N)		Allowable thrust load (N) (a)		Allowable thrust load (N) (b)		Allowable moment (N•m)	
Standard model	High rigidity model	Standard model	High rigidity model	Standard model	High rigidity model	Standard model	High rigidity model
196	233	197		363	398	5.3	6.4

Note. When purchasing the product, set the controller acceleration while carefully checking the "Moment of inertia vs. Acceleration/Deceleration" and "Effective torque vs. Speed" graphs.
For details, please refer to the TRANSERVO Series User's Manual.

Controller

Controller	Operation method
TS-S2S TS-SHS	I/O point trace / Remote command

RF03-SN Sensor specification – Standard model

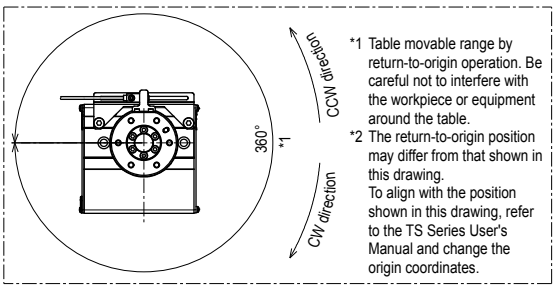

*1 Table movable range by return-to-origin operation. Be careful not to interfere with the workpiece or equipment around the table.
*2 The return-to-origin position may differ from that shown in this drawing.
To align with the position shown in this drawing, refer to the TS Series User's Manual and change the origin coordinates.

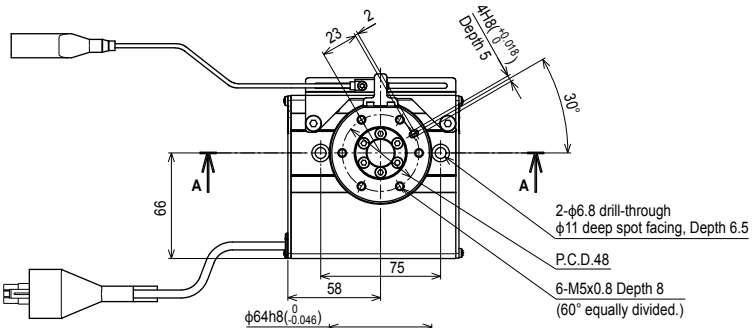

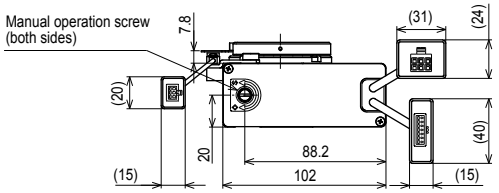

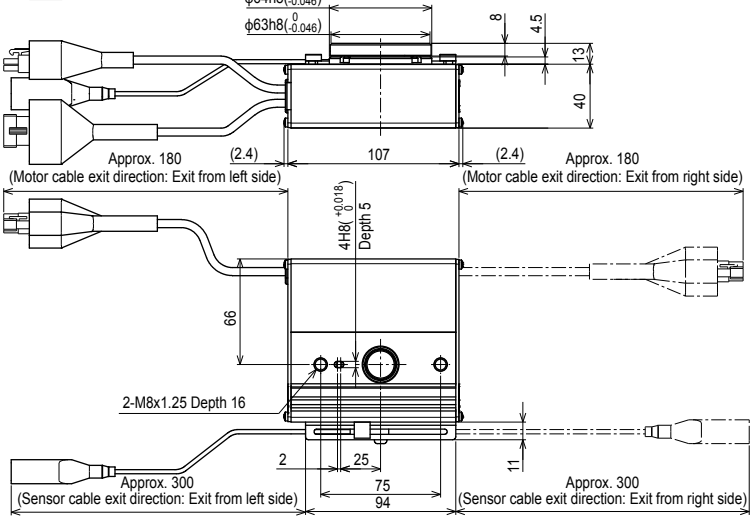

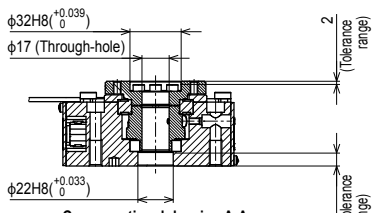

Cross-sectional drawing A-A

Weight (kg)	1.2

Note 1. This drawing is output under the conditions below.
Bearing..... Standard
Torque..... Standard/High torque
Note 2. The minimum bending radii of the motor cable and sensor cable are R30.

Controller TS-S2 ▶ 490 TS-SH ▶ 490

RF03-SH Sensor specification – High rigidity model

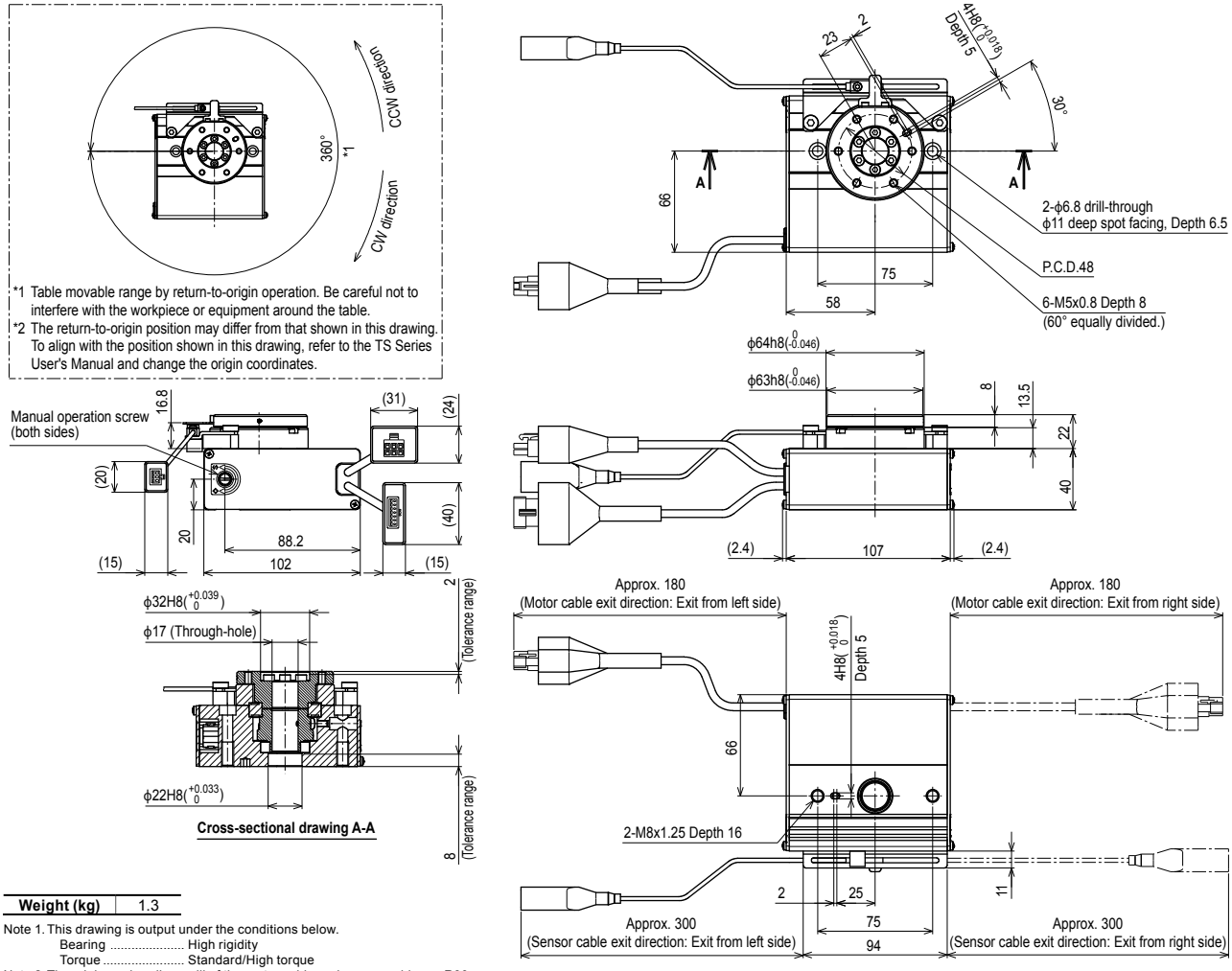

Weight (kg)	1.3

Note 1. This drawing is output under the conditions below.
Bearing ..... High rigidity
Torque ..... Standard/High torque
Note 2. The minimum bending radii of the motor cable and sensor cable are R30.

RF04-N

Rotary type / Limit rotation specification

- CE compliance
- Rotation range : 320°

Ordering method

RF04 - **N** - [ ] - [ ] - [ ] - [ ] - [ ] - [ ] - [ ] - [ ] - [ ]

Model	Return-to-origin method	Bearing	Torque	Cable entry location	Rotation direction	Cable length Note 1
RF04	N: Stroke end (Limit rotation)	N: Standard H: High rigidity	N: Standard torque H: High torque	R:From the right L: From the left	N: CCW Z: CW	1K: 1m 3K: 3m 5K: 5m 10K: 10m

S2

Robot positioner	I/O
S2: TS-S2 Note2	NP: NPN PN: PNP CC: CC-Link DN: DeviceNet™ EP: EtherNet/IP™ PT: PROFINET GW: No I/O board Note 3

SH

Robot positioner	I/O	Battery
SH: TS-SH	NP: NPN PN: PNP CC: CC-Link DN: DeviceNet™ EP: EtherNet/IP™ PT: PROFINET GW: No I/O board Note 3	B: With battery (Absolute) N: None (Incremental)

SD

Robot driver	I/O cable
SD: TS-SD	1: 1m

Note 1. The robot cable is flexible and resists bending.
Note 2. See P.498 for DIN rail mounting bracket.
Note 3. Select this selection when using the gateway function. For details, see P.60.

Basic specifications

Motor	42 □ Step motor	
Resolution (Pulse/rotation)	20480	
Repeatability Note 1 **(°)**	+/-0.05	
Drive method	Special warm gear + belt	
Torque type	Standard	High torque
Maximum speed Note 2 **(°/sec)**	420	280
Rotating torque (N•m)	6.6	10
Max. pushing torque (N•m)	3.3	5
Backlash (°)	+/-0.5	
Max. moment of inertia Note 3 **(kg•m²)**	0.04	0.1
Cable length (m)	Standard: 1 / Option: 3, 5, 10	
Rotation range (°)	320	

Note 1. Positioning repeatability in one direction.
Note 2. The maximum speed may vary depending on the moment of inertia. Check the maximum speed while referring to the "Moment of inertia vs. Acceleration/deceleration" graph and the "Effective torque vs. speed" graph (reference).
Note 3. For moment of inertia and effective torque details, see P.604.

Moment of inertia Acceleration/deceleration

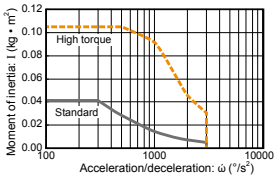

Effective torque vs. speed

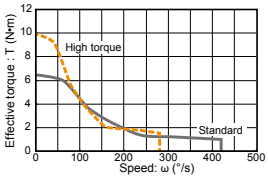

Allowable load

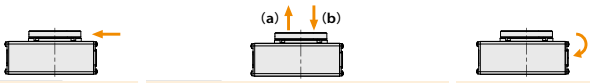

Allowable radial load (N)		Allowable thrust load (N) (a)		Allowable thrust load (N) (b)		Allowable moment (N•m)	
Standard model	High rigidity model	Standard model	High rigidity model	Standard model	High rigidity model	Standard model	High rigidity model
314	378	296		398	517	9.7	12.0

Note. When purchasing the product, set the controller acceleration while carefully checking the "Moment of inertia vs. Acceleration/Deceleration" and "Effective torque vs. Speed" graphs.
For details, please refer to the TRANSERVO Series User's Manual.

Controller

Controller	Operation method
TS-S2 TS-SH	I/O point trace / Remote command
TS-SD	Pulse train control

RF04-NN Limit rotation specification – Standard model

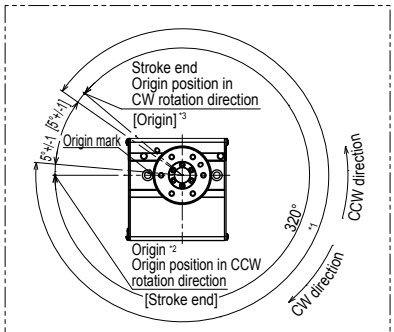

*1 Table movable range by return-to-origin operation. Be careful not to interfere with the workpiece or equipment around the table.
*2 Return-to-origin position
*3 Values and characters in [ ] show those when the return-to-origin direction is changed.

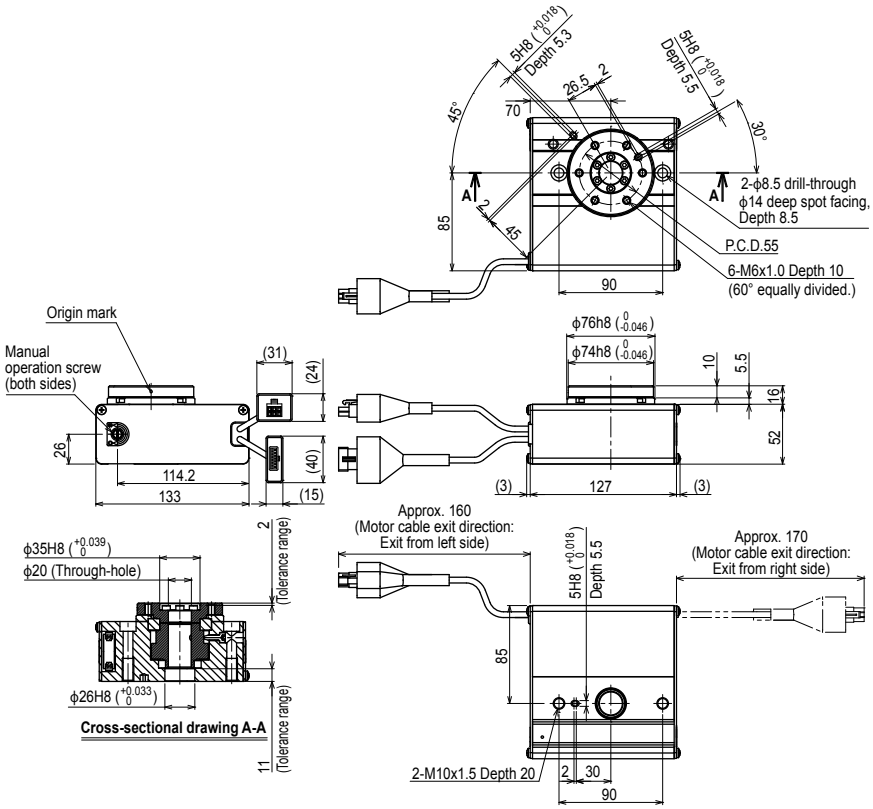

Weight (kg)	2.2

Note 1.This drawing is output under the conditions below.
Bearing..... Standard
Torque..... Standard/High torque
Note 2.The minimum bending radius of the motor cable is R30.

Controller TS-S2 ▶ 490 TS-SH ▶ 490 TS-SD ▶ 500

RF04-NH Limit rotation specification – High rigidity model

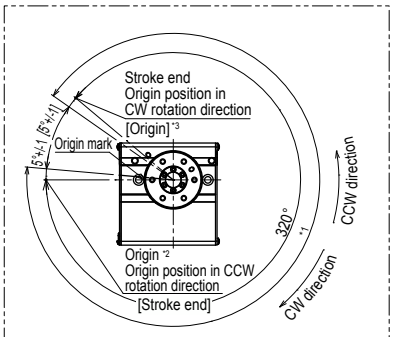

*1 Table movable range by return-to-origin operation. Be careful not to interfere with the workpiece or equipment around the table.
*2 Return-to-origin position
*3 Values and characters in [ ] show those when the return-to-origin direction is changed.

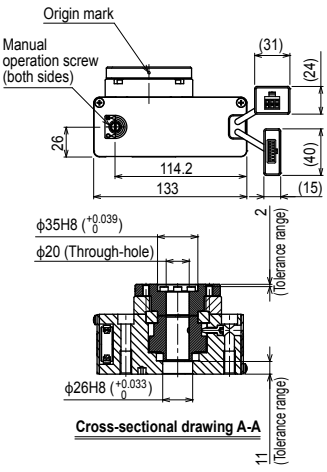

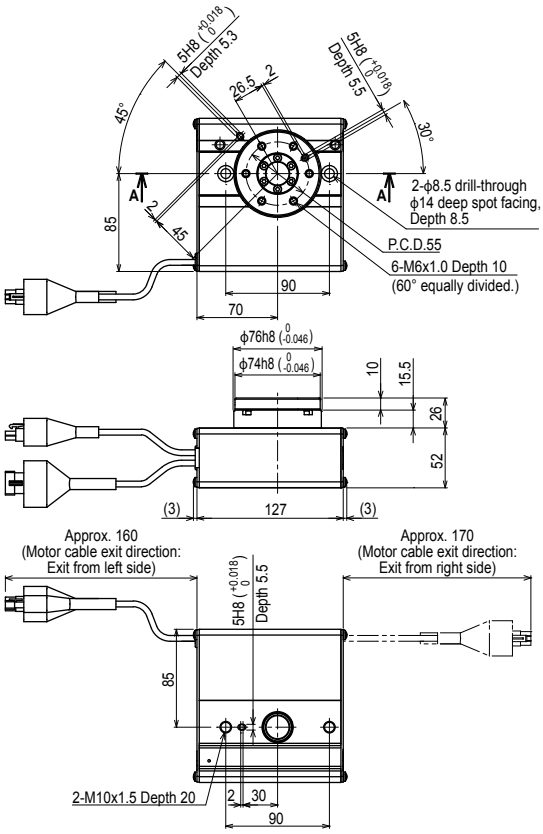

Weight (kg)	2.4

Note 1.This drawing is output under the conditions below.
Bearing..... High rigidity
Torque ..... Standard/High torque
Note 2.The minimum bending radius of the motor cable is R30.

RF04-S

Rotary type / Sensor specification

- CE compliance
- Limitless rotation

Ordering method

RF04 - **S** - [ ] - [ ] - [ ] - [ ] - [ ] - [ ]

Model	Return-to-origin method	Bearing	Torque	Cable entry location	Rotation direction	Cable length Note 1
RF04	S: Sensor (Limitless rotation)	N: Standard H: High rigidity	N: Standard torque H: High torque	R: From the right L: From the left	N: CCW Z: CW	1K: 1m 3K: 3m 5K: 5m 10K: 10m

S2

Robot positioner	I/O
S2: TS-S2 Note2	NP: NPN PN: PNP CC: CC-Link DN: DeviceNet™ EP: EtherNet/IP™ PT: PROFINET GW: No I/O board Note 3

SH

Robot positioner	I/O	Battery
SH: TS-SH	NP: NPN PN: PNP CC: CC-Link DN: DeviceNet™ EP: EtherNet/IP™ PT: PROFINET GW: No I/O board Note 3	B: With battery (Absolute) N: None (Incremental)

Note 1. The robot cable is flexible and resists bending.
Note 2. See P.498 for DIN rail mounting bracket.
Note 3. Select this selection when using the gateway function. For details, see P.60.

Basic specifications

Motor	42 □ Step motor	
Resolution (Pulse/rotation)	20480	
Repeatability Note 1 **(°)**	+/-0.05	
Drive method	Special warm gear + belt	
Torque type	Standard	High torque
Maximum speed Note 2 **(°/sec)**	420	280
Rotating torque (N•m)	6.6	10
Max. pushing torque (N•m)	3.3	5
Backlash (°)	+/-0.5	
Max. moment of inertia Note 3 **(kg•m²)**	0.04	0.1
Cable length (m)	Standard: 1 / Option: 3, 5, 10	
Rotation range (°)	360	

Note 1. Positioning repeatability in one direction.
Note 2. The maximum speed may vary depending on the moment of inertia. Check the maximum speed while referring to the "Moment of inertia vs. Acceleration/deceleration" graph and the "Effective torque vs. speed" graph (reference).
Note 3. For moment of inertia and effective torque details, see P.604.

Moment of inertia Acceleration/deceleration

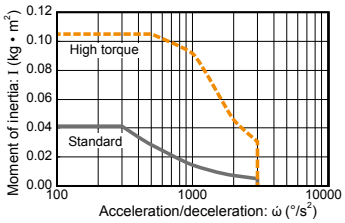

Effective torque vs. speed

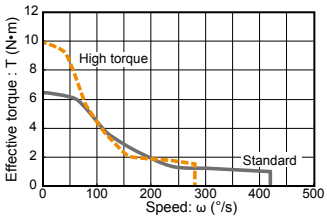

Allowable load

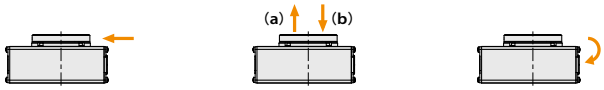

Allowable radial load (N)		Allowable thrust load (N)				Allowable moment (N•m)	
		(a)		(b)			
Standard model	High rigidity model	Standard model	High rigidity model	Standard model	High rigidity model	Standard model	High rigidity model
314	378	296		398	517	9.7	12.0

Note. When purchasing the product, set the controller acceleration while carefully checking the "Moment of inertia vs. Acceleration/Deceleration" and "Effective torque vs. Speed" graphs.
For details, please refer to the TRANSERVO Series User's Manual.

Controller

Controller	Operation method
TS-S2S	I/O point trace /
TS-SHS	Remote command

RF04-SN Sensor specification – Standard model

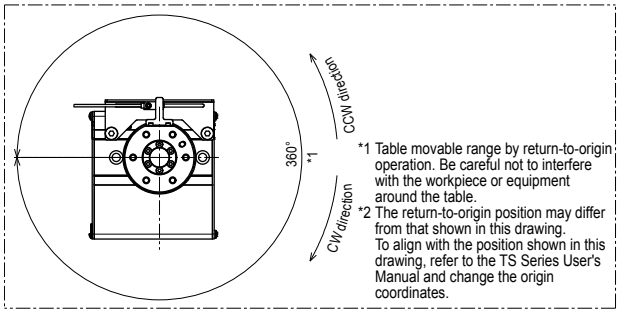

*1 Table movable range by return-to-origin operation. Be careful not to interfere with the workpiece or equipment around the table.
*2 The return-to-origin position may differ from that shown in this drawing. To align with the position shown in this drawing, refer to the TS Series User's Manual and change the origin coordinates.

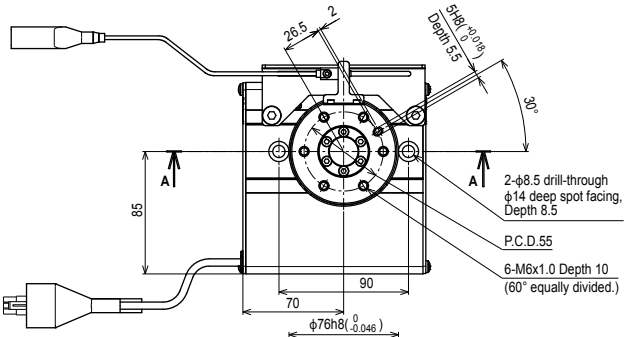

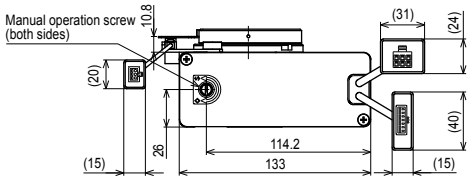

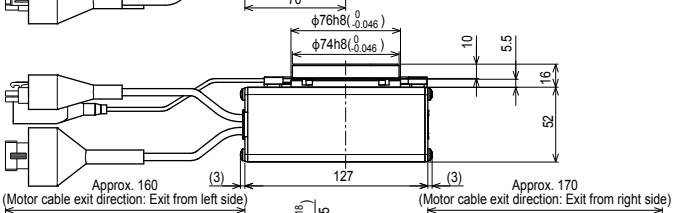

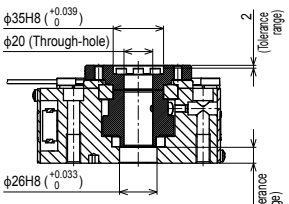

Cross-sectional drawing A-A

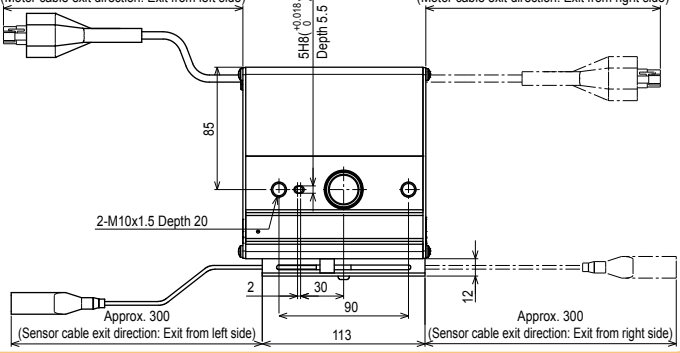

Weight (kg)	2.3

Note 1. This drawing is output under the conditions below.
Bearing ..... Standard
Torque ..... Standard/High torque
Note 2. The minimum bending radii of the motor cable and sensor cable are R30.

Controller TS-S2 ▶ 490 TS-SH ▶ 490

RF04-SH Sensor specification – High rigidity model

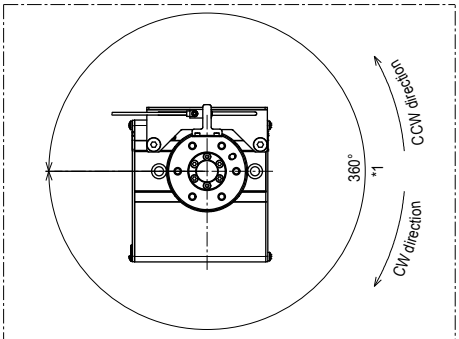

*1 Table movable range by return-to-origin operation. Be careful not to interfere with the workpiece or equipment around the table.
*2 The return-to-origin position may differ from that shown in this drawing. To align with the position shown in this drawing, refer to the TS Series User's Manual and change the origin coordinates.

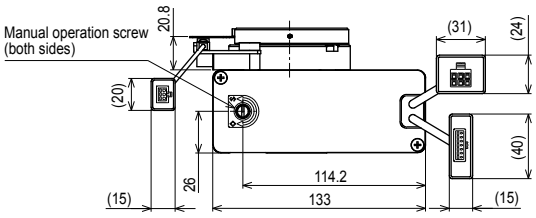

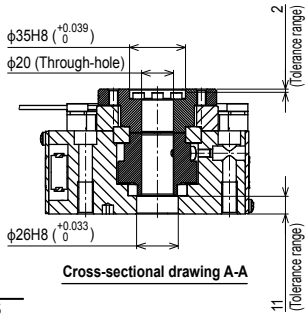

Cross-sectional drawing A-A

Weight (kg)	2.5

Note 1. This drawing is output under the conditions below.
Bearing..... High rigidity
Torque..... Standard/High torque
Note 2. The minimum bending radii of the motor cable and sensor cable are R30.

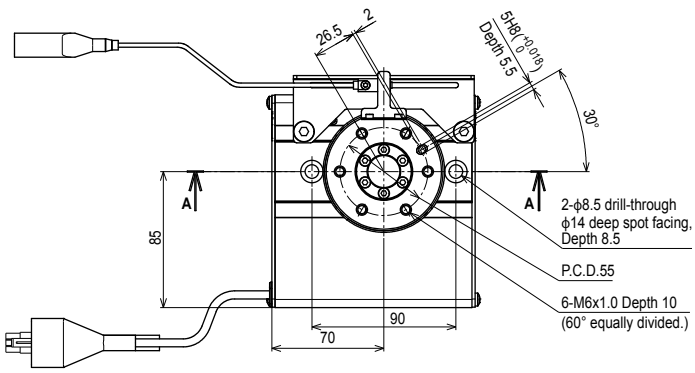

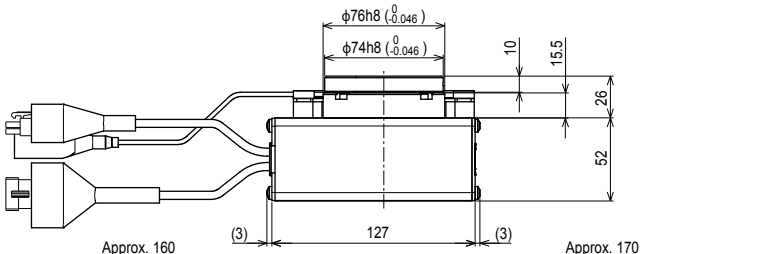

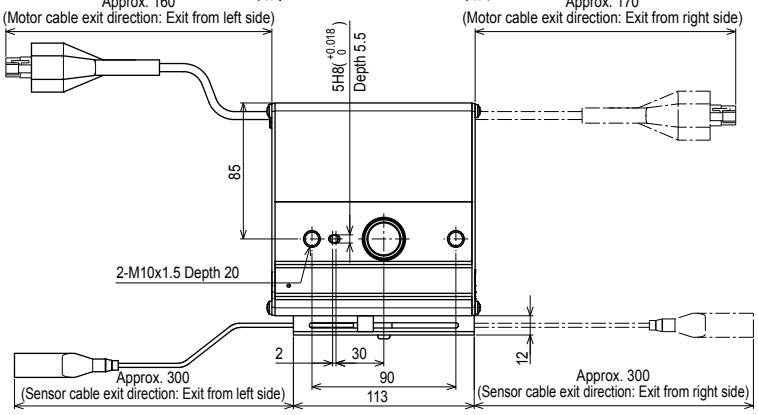

BD04 Belt type

CE compliance

Ordering method

BD04 -	48	N	- N		-	
Model	Lead	Brake	Origin position	Stroke	Cable length Note 1	
	48: 48mm	N: With no brake	N: Standard	300: 300mm 500: 500mm 600: 600mm 700: 700mm 800: 800mm 900: 900mm 1000: 1000mm	1K: 1m 3K: 3m 5K: 5m 10K: 10m	

S2

Robot positioner	I/O
S2: TS-S2 Note2	NP: NPN PN: PNP CC: CC-Link DN: DeviceNet™ EP: EtherNet/IP™ PT: PROFINET GW: No I/O board Note3

SH

Robot positioner	I/O	Battery
SH: TS-SH	NP: NPN PN: PNP CC: CC-Link DN: DeviceNet™ EP: EtherNet/IP™ PT: PROFINET GW: No I/O board Note3	B: With battery (Absolute) N: None (Incremental)

SD 1

Robot driver	I/O cable
SD: TS-SD	1: 1m

Note 1. The robot cable is flexible and resists bending.
Note 2. See P.498 for DIN rail mounting bracket.
Note 3. Select this selection when using the gateway function. For details, see P.60.

Basic specifications

Motor	28 □ Step motor
Resolution (Pulse/rotation)	4096
Repeatability Note 1 (mm)	+/-0.1
Drive method	Belt
Equivalent lead (mm)	48
Maximum speed Note 2 (mm/sec)	1100
Maximum payload (kg)	1
Stroke (mm)	300/500/600/700/800/900/1000
Overall length (mm) (Horizontal installation)	Stroke + 195.5
Maximum outside dimension of body cross-section (mm)	W40 × H101.9
Cable length (m)	Standard: 1 / Option: 3, 5, 10

Note 1. Positioning repeatability in one direction.
Note 2. The maximum speed needs to be changed in accordance with the payload.
See the "Speed vs. payload" graph shown on the right.

Allowable overhang Note

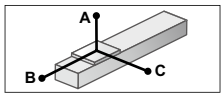

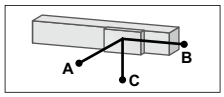

Horizontal installation (Unit: mm)

	A	B	C
0.5kg	8036	1950	1504
1kg	3933	968	747

Wall installation (Unit: mm)

	A	B	C
0.5kg	1614	1942	8013
1kg	798	961	3969

Note. Distance from center of slider upper surface to carrier center-of-gravity at a guide service life of 10,000km (This does not warrant the service life of the product.). (Service life is calculated for 600mm stroke models.)

Static loading moment

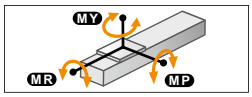

(Unit: N·m)

MY	MP	MR
10	10	20

Speed vs. payload

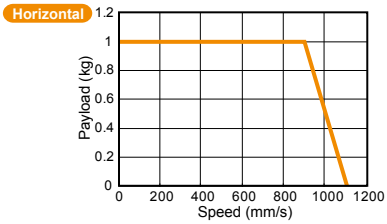

Quick reference

Payload (kg)	Speed (mm/sec)	%
1	900	90
0.5	1000	95
0	1100	100

Controller

Controller	Operation method
TS-S2 TS-SH	I/O point trace / Remote command
TS-SD	Pulse train control

BD04

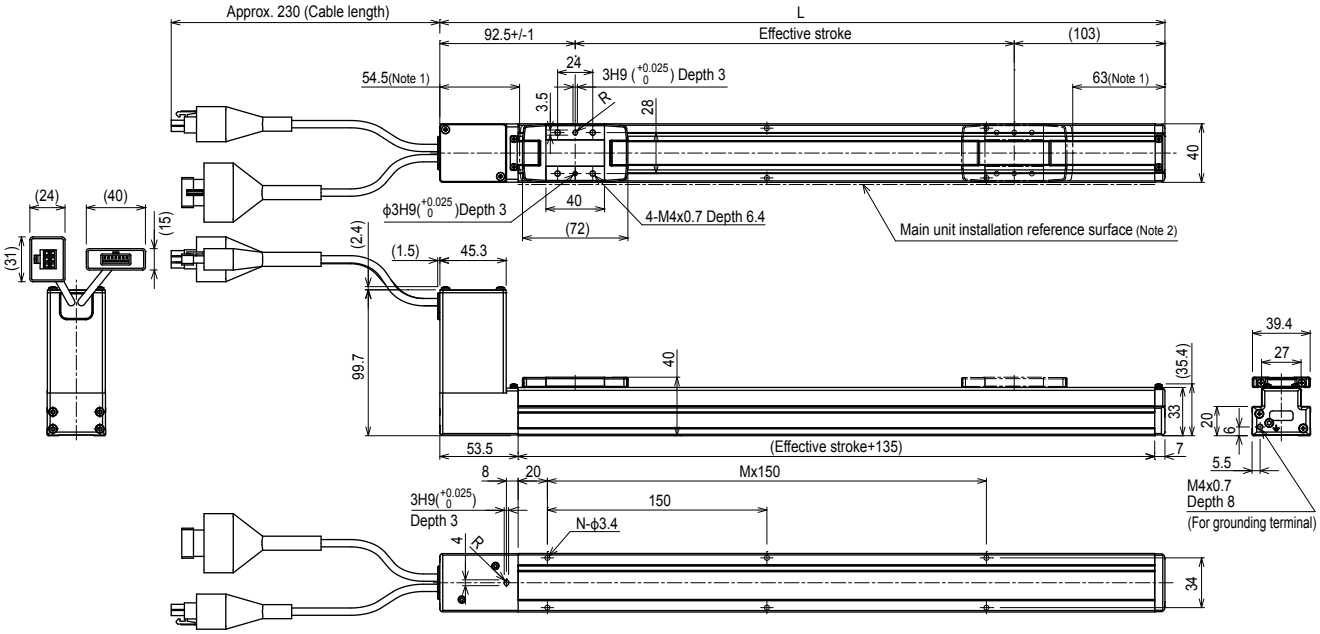

Effective stroke	300	500	600	700	800	900	1000
L	495.5	695.5	795.5	895.5	995.5	1095.5	1195.5
M	2	4	4	5	6	6	7
N	6	10	10	12	14	14	16
Weight (kg)	1.19	1.45	1.58	1.71	1.84	1.97	2.1

Note 1. Position from both ends to the mechanical stopper. (Movable range during return-to-origin)
Note 2. When installing using the main unit installation reference surface, make the mating or positioning height 2mm or more higher than the reference surface since the R-chamfering is provided on the main unit. (Recommended height, 5mm)
Note 3. The minimum bending radius of the motor cable is R30.

Controller TS-S2 ▶ 490 TS-SH ▶ 490 TS-SD ▶ 500

BD05 Belt type

CE compliance

Ordering method

BD05 -	48	N	- N			-	
Model	Lead	Brake	Origin position	Stroke	Cable length Note 1		
	48: 48mm	N: With no brake	N: Standard	300: 300mm 500: 500mm 600: 600mm 700: 700mm 800: 800mm 900: 900mm 1000: 1000mm 1200: 1200mm 1500: 1500mm 1800: 1800mm 2000: 2000mm	1K: 1m 3K: 3m 5K: 5m 10K: 10m		

S2

Robot positioner	I/O
S2: TS-S2 Note2	NP: NPN PN: PNP CC: CC-Link DN: DeviceNet™ EP: EtherNet/IP™ PT: PROFINET GW: No I/O board Note 3

SH

Robot positioner	I/O	Battery
SH: TS-SH	NP: NPN PN: PNP CC: CC-Link DN: DeviceNet™ EP: EtherNet/IP™ PT: PROFINET GW: No I/O board Note 3	B: With battery (Absolute) N: None (Incremental)

SD 1

Robot driver	I/O cable
SD: TS-SD	1: 1m

Note 1. The robot cable is flexible and resists bending.
Note 2. See P.498 for DIN rail mounting bracket.
Note 3. Select this selection when using the gateway function. For details, see P.60.

Basic specifications

Motor	42 □ Step motor
Resolution (Pulse/rotation)	20480
Repeatability Note 1 (mm)	+/-0.1
Drive method	Belt
Equivalent lead (mm)	48
Maximum speed Note 2 (mm/sec)	1400
Maximum payload (kg)	5
Stroke (mm)	300/500/600/700/800/900/1000/1200/1500/1800/2000
Overall length (mm) (Horizontal installation)	Stroke + 241.8
Maximum outside dimension of body cross-section (mm)	W58 × H123
Cable length (m)	Standard: 1 / Option: 3, 5, 10

Note 1. Positioning repeatability in one direction.
Note 2. The maximum speed needs to be changed in accordance with the payload.
See the "Speed vs. payload" graph shown on the right.

Allowable overhang Note

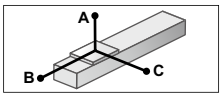

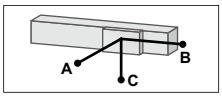

Horizontal installation (Unit: mm)

	A	B	C
1kg	9445	2274	1681
3kg	2982	702	553
5kg	1689	385	325

Wall installation (Unit: mm)

	A	B	C
1kg	1784	2312	9545
3kg	573	743	3082
5kg	331	429	1789

Note. Distance from center of slider upper surface to carrier center-of-gravity at a guide service life of 10,000km (This does not warrant the service life of the product.). (Service life is calculated for 600mm stroke models.)

Static loading moment

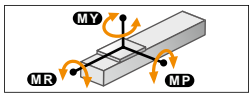

(Unit: N·m)

MY	MP	MR
27	27	52

Speed vs. payload

Horizontal

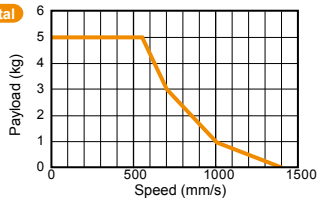

Quick reference

Payload (kg)	Speed (mm/sec)	%
5	550	39
3	700	50
1	1000	71
0	1400	100

Controller

Controller	Operation method
TS-S2 TS-SH	I/O point trace / Remote command
TS-SD	Pulse train control

BD05

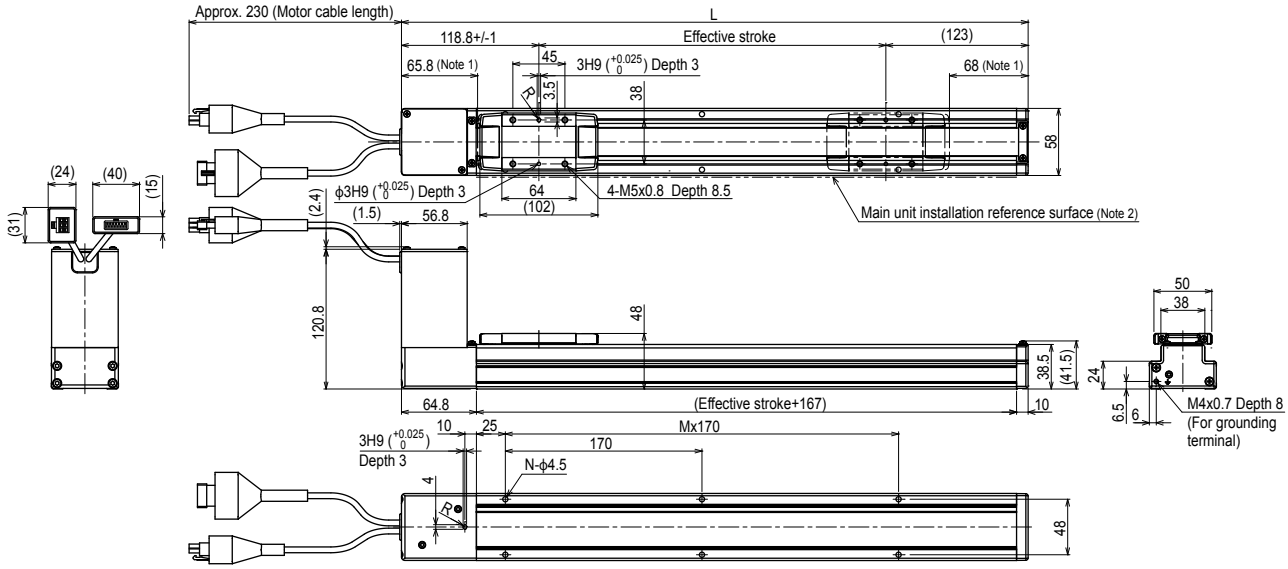

Effective stroke	300	500	600	700	800	900	1000	1200	1500	1800	2000
L	541.8	741.8	841.8	941.8	1041.8	1141.8	1241.8	1441.8	1741.8	2041.8	2241.8
M	2	3	4	4	5	6	6	7	9	11	12
N	6	8	10	10	12	14	14	16	20	24	26
Weight (kg)	2.39	2.85	3.08	3.31	3.54	3.77	4	4.46	5.15	5.84	6.3

Note 1. Position from both ends to the mechanical stopper. (Movable range during return-to-origin)
Note 2. When installing using the main unit installation reference surface, make the mating or positioning height 2mm or more higher than the reference surface since the R-chamfering is provided on the main unit. (Recommended height, 5mm)
Note 3. The minimum bending radius of the motor cable is R30.

Controller TS-S2 ▶ 490 TS-SH ▶ 490 TS-SD ▶ 500

BD07 Belt type

CE compliance

Ordering method

BD07 - **48** - **N** - **N** - [ ] - [ ] - **S2** [ ]

Model	Lead	Brake	Origin position	Stroke	Cable length Note 1
BD07	48: 48mm	N: With no brake	N: Standard	300: 300mm 500: 500mm 600: 600mm 700: 700mm 800: 800mm 900: 900mm 1000: 1000mm 1200: 1200mm 1500: 1500mm 1800: 1800mm 2000: 2000mm	1K: 1m 3K: 3m 5K: 5m 10K: 10m

S2

Robot positioner	I/O
S2: TS-S2 Note2	NP: NPN PN: PNP CC: CC-Link DN: DeviceNet™ EP: EtherNet/IP™ PT: PROFINET GW: No I/O board Note 3

SH

Robot positioner	I/O	Battery
SH: TS-SH	NP: NPN PN: PNP CC: CC-Link DN: DeviceNet™ EP: EtherNet/IP™ PT: PROFINET GW: No I/O board Note 3	B: With battery (Absolute) N: None (Incremental)

SD **1**

Robot driver	I/O cable
SD: TS-SD	1: 1m

Note 1. The robot cable is flexible and resists bending.
Note 2. See P.498 for DIN rail mounting bracket.
Note 3. Select this selection when using the gateway function. For details, see P.60.

Basic specifications

Motor	56 □ Step motor
Resolution (Pulse/rotation)	20480
Repeatability Note 1 (mm)	+/-0.1
Drive method	Belt
Equivalent lead (mm)	48
Maximum speed Note 2 (mm/sec)	1500
Maximum payload (kg)	14
Stroke (mm)	300/500/600/700/800/900/1000/1200/1500/1800/2000
Overall length (mm) (Horizontal installation)	Stroke + 285.6
Maximum outside dimension of body cross-section (mm)	W70 × H147.5
Cable length (m)	Standard: 1 / Option: 3, 5, 10

Note 1. Positioning repeatability in one direction.
Note 2. The maximum speed needs to be changed in accordance with the payload.
See the "Speed vs. payload" graph shown on the right.

Allowable overhang Note

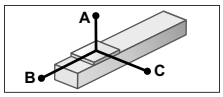

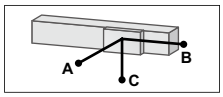

Horizontal installation (Unit: mm)

	A	B	C
3kg	5767	1353	1247
8kg	1839	399	458
14kg	829	154	254

Wall installation (Unit: mm)

	A	B	C
3kg	1324	1354	5588
8kg	474	399	1658
14kg	255	151	643

Note. Distance from center of slider upper surface to carrier center-of-gravity at a guide service life of 10,000km (This does not warrant the service life of the product.). (Service life is calculated for 600mm stroke models.)

Static loading moment

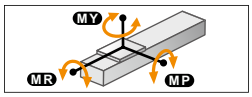

(Unit: N·m)

MY	MP	MR
46	46	101

Speed vs. payload

Horizontal

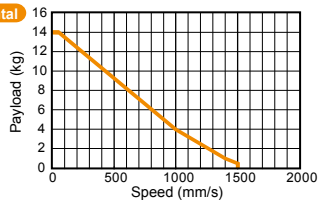

Quick reference

Payload (kg)	Speed (mm/sec)	%
14	50	3
9	525	35
4	1000	66
1	1400	93
0.5	1500	100

Controller

Controller	Operation method
TS-S2 TS-SH	I/O point trace / Remote command
TS-SD	Pulse train control

BD07

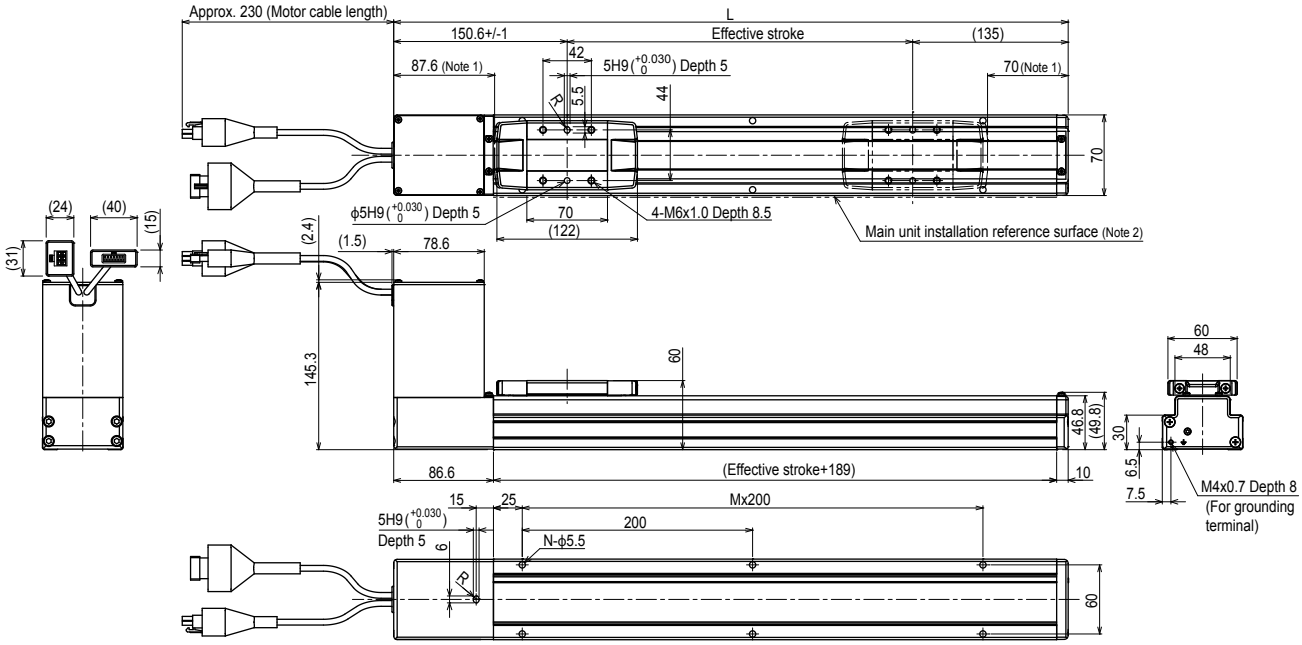

Effective stroke	300	500	600	700	800	900	1000	1200	1500	1800	2000
L	585.6	785.6	885.6	985.6	1085.6	1185.6	1285.6	1485.6	1785.6	2085.6	2285.6
M	2	3	3	4	4	5	5	6	8	9	10
N	6	8	8	10	10	12	12	14	18	20	22
Weight (kg)	4.12	4.8	5.14	5.48	5.82	6.16	6.5	7.18	8.2	9.22	9.9

Note 1. Position from both ends to the mechanical stopper. (Movable range during return-to-origin)
Note 2. When installing using the main unit installation reference surface, make the mating or positioning height 2mm or more higher than the reference surface since the R-chamfering is provided on the main unit. (Recommended height, 5mm)
Note 3. The minimum bending radius of the motor cable is R30.

Controller TS-S2 ▶ 490 TS-SH ▶ 490 TS-SD ▶ 500